STATE OF TENNESSEE
AIR POLLUTION CONTROL BOARD
DEPARTMENT OF ENVIRONMENT AND CONSERVATION
NASHVILLE, TENNESSEE 37243

Permit to Construct or Modify an Air Contaminant Source Issued Pursuant to Tennessee Air Quality Act

Date Issued: January 27, 2015

Permit Number: 969580G

Date Expires: January 26, 2016

Issued To:
Speedway LLC dba Speedway # 7159

Installation Address:
1065 Deep Springs Rd.
Dandridge

Installation Description:
Gasoline Dispensing Facility
(Non-ISBMG, Stage I Vapor Recovery
Maximum Monthly Throughput ≥ 100k gal/month)

Emission Source Reference No.
45-0164-01
NESHAP (Subpart CCCCCC)

The holder of this permit shall comply with the conditions contained in this permit as well as all applicable provisions of the Tennessee Air Pollution Control Regulations (TAPCR).

CONDITIONS:

1. The application that was utilized in the preparation of this permit is dated November 6, 2014, and is signed by Mr. Toby Rickabaugh, Environmental Compliance Manager for the permitted facility. If this person terminates employment or is reassigned different duties and is no longer the responsible person to represent and bind the facility in environmental permitting affairs, the owner or operator of this air contaminant source shall notify the Technical Secretary of the change. Said notification shall be in writing and submitted within thirty (30) days of the change. The notification shall include the name and title of the new person assigned by the source owner or operator to represent and bind the facility in environmental permitting affairs. All representations, agreement to terms and conditions and covenants made by the former responsible person that were used in the establishment of limiting permit conditions on this permit will continue to be binding on the facility until such time that a revision to this permit is obtained that would change said representations, agreements and covenants. TAPCR 1200-03-09-.01(1)(d)

(conditions continued on next page)

TECHNICAL SECRETARY

No Authority is Granted by this Permit to Operate, Construct, or Maintain any Installation in Violation of any Law, Statute, Code, Ordinance, Rule, or Regulation of the State of Tennessee or any of its Political Subdivisions.

NON-TRANSFERABLE

POST AT INSTALLATION ADDRESS

2. The total stated maximum throughput of gasoline for this source is 3,600,000 gallons per calendar year. The total stated maximum monthly throughput of gasoline for this source is equal to or greater than 100,000 gallons per month. As defined in 40 CFR §63.11132, monthly throughput means the total volume of gasoline that is loaded into, or dispensed from, all gasoline storage tanks at each gasoline dispensing facility (GDF) during a month. Monthly throughput is calculated by summing the volume of gasoline loaded into, or dispensed from, all gasoline storage tanks at each GDF during the current day, plus the total volume of gasoline loaded into, or dispensed from, all gasoline storage tanks at each GDF during the previous 364 days, and then dividing that sum by 12. The permittee shall calculate and record the monthly throughput of gasoline in a log on each day of each month. Pursuant to 40 CFR §63.11117(d), the permittee shall have records available within 24 hours of a request by the Technical Secretary or his representative, to document monthly throughput at this facility. Monthly data, including all required calculations, must be entered in the log no later than thirty (30) days from the end of the month for which the data is required. This record must be retained for a period of not less than five years.

	Volume of gasoline loaded into, or dispensed from, all gasoline storage tanks during the current day, plus the total volume of gasoline loaded into, or dispensed from, all gasoline storage tanks during the previous 364 days (gallons/365 days)	Calculated Monthly Throughput of Gasoline (gallons/month)
January 1		
January 2		
January 3		
Etc.		
December 31		

Calendar Year 20___	Throughput of Gasoline (gallons per calendar year)
Total for January 1 to December 31	

3. Pursuant to 40 CFR §63.11111, this gasoline dispensing facility (GDF), located in Jefferson County and exceeding the applicability threshold specified in 40 CFR §63.11111(d) shall be subject to all of the respective provisions of 40 CFR §63.11118 for facilities exceeding this applicability threshold and shall remain subject to these provisions even if throughput later falls below this threshold or if ownership of the facility is transferred.

4. Pursuant to 40 CFR §63.11115, the permittee shall comply with the requirements of paragraphs (a) and (b) of this condition.
   (a) The permittee shall, at all times, operate and maintain any affected source, including associated air pollution control equipment and monitoring equipment, in a manner consistent with safety and good air pollution control practices for minimizing emissions. Determination of whether such operation and maintenance procedures are being used will be based on information available to the Technical Secretary which may include, but is not limited to, monitoring results, review of operation and maintenance procedures, review of operation and maintenance records, and inspection of the source.
   (b) The permittee shall keep applicable records and submit reports as specified in 40 CFR §63.11125(d) and §63.11126(b).

5. Pursuant to 40 CFR §§63.11116(a) and 63.11118(a), the permittee shall not allow gasoline to be handled in a manner that would result in vapor releases to the atmosphere for extended periods of time. Measures to be taken include, but are not limited to, the following:
   (a) Minimize gasoline spills;
   (b) Clean up spills as expeditiously as practicable;
   (c) Cover all open gasoline containers and all gasoline storage tank fill-pipes with a gasketed seal when not in use;
   (d) Minimize gasoline sent to open waste collection systems that collect and transport gasoline to reclamation and recycling devices, such as oil/water separators.
   (e) Portable gasoline containers that meet the requirements of 40 CFR part 59, subpart F, are considered acceptable for compliance with paragraph (c) of this condition.

6. The permittee shall comply with 40 CFR §§63.11117(b) and 63.11118(a) by complying with **Condition 27** of this permit.

7. Pursuant to 40 CFR §63.11118(b), except as provided in **Condition 8** of this permit, the permittee shall meet the requirements in either paragraph (1) or paragraph (2) of this condition.
   (1) Each management practice in **Table 1, located in Attachment 1**.
   (2) If, prior to January 10, 2008, the permittee satisfies the requirements in both paragraphs (i) and (ii) of this condition, the permittee will be deemed in compliance with this condition.
      (i) The permittee operates a vapor balance system at the GDF that meets the requirements of either paragraph (A) or paragraph (B) of this condition.
         (A) Achieves emissions reduction of at least 90 percent.
         (B) Operates using management practices at least as stringent as those in **Table 1, located in Attachment 1**.
      (ii) The permittee's gasoline dispensing facility is in compliance with an enforceable State rule or permit that contains requirements of either paragraph (A) or paragraph (B) of this condition.

8. Pursuant to 40 CFR §63.11118(c), the emission sources listed in paragraphs (1) through (3) of this condition are not required to comply with the control requirements in **Condition 7** of this permit, but must comply with the requirements in **Conditions 5 and 6** of this permit.
   (1) Gasoline storage tanks with a capacity of less than 250 gallons that are constructed after January 10, 2008.
   (2) Gasoline storage tanks with a capacity of less than 2,000 gallons that were constructed before January 10, 2008.
   (3) Gasoline storage tanks equipped with floating roofs, or the equivalent.

9. Pursuant to 40 CFR §63.11118(d), cargo tanks unloading at this facility must comply with the management practices in **Table 2, located in Attachment 1** to this permit.

10. Pursuant to 40 CFR §63.11118(e), the permittee must comply with the applicable testing requirements contained in **Conditions 14 and 15**.

11. Pursuant to 40 CFR §63.11118(f), the permittee must submit the applicable notifications as required under **Condition 18**.

12. Pursuant to 40 CFR §63.11118(g), the permittee must keep records and submit reports as specified in **Conditions 19 through 24**.

13. Pursuant to 40 CFR §§63.11118(h) and 63.11113(a)(1), the permittee must comply with **Conditions 3 through 25** of this permit upon startup.

14. Pursuant to 40 CFR §63.11120(a), the permittee, at the time of installation of a vapor balance system required under **Condition 7**, and every 3 years thereafter, must comply with the requirements in paragraphs (1) and (2) below. For vapor balance systems installed after December 15, 2009, the permittee shall conduct an initial compliance test upon installation of the complete vapor balance system.
    (1) The permittee must demonstrate compliance with the leak rate and cracking pressure requirements, specified in item 1(g) of **Table 1, located in Attachment 1** to this permit, for pressure-vacuum vent valves installed on this source's gasoline storage tanks using the test methods identified in paragraph (i) or paragraph (ii) below.
        (i) California Air Resources Board Vapor Recovery Test Procedure TP–201.1E,—Leak Rate and Cracking Pressure of Pressure/Vacuum Vent Valves, adopted October 8, 2003, a copy of which is included as **Attachment 2** to this permit.
        (ii) Use alternative test methods and procedures in accordance with the alternative test method requirements in 40CFR §63.7(f).
    (2) The permittee must demonstrate compliance with the static pressure performance requirement, specified in item 1(h) of **Table 1, located in Attachment 1** to this permit, for this source's vapor balance system by conducting a static pressure test on this source's gasoline storage tanks using the test methods identified in paragraph (i), paragraph (ii), or paragraph (iii) below.
        (i) California Air Resources Board Vapor Recovery Test Procedure TP–201.3,—Determination of 2-Inch WC Static Pressure Performance of Vapor Recovery Systems of Dispensing Facilities, adopted April 12, 1996, and amended March 17, 1999, a copy of which is included as **Attachment 3** to this permit.
        (ii) Use alternative test methods and procedures in accordance with the alternative test method requirements in §63.7(f).
        (iii) Bay Area Air Quality Management District Source Test Procedure ST-30-Static Pressure Integrity Test-Underground Storage Tanks, adopted November 30, 1983, and amended December 21, 1994.

15. Pursuant to 40 CFR §63.11120(b), if the permittee chooses, under the provisions of 40 CFR §63.6(g), to use a vapor balance system other than that described in **Table 1, located in Attachment 1** to this permit, the permittee must demonstrate to the Technical Secretary, the equivalency of their vapor balance system to that described in **Table 1, located in Attachment 1** to this permit using the procedures specified in paragraphs (1) through (3) below.
    (1) The permittee must demonstrate initial compliance by conducting an initial performance test on the vapor balance system to demonstrate that the vapor balance system achieves 95 percent reduction using the California Air Resources Board Vapor Recovery Test Procedure TP–201.1,—Volumetric Efficiency for Phase I Vapor Recovery Systems, adopted April 12, 1996, and amended February 1, 2001, and October 8, 2003, a copy of which is included as **Attachment 4** to this permit.
    (2) The permittee must, during the initial performance test required under paragraph (1) of this condition, determine and document alternative acceptable values for the leak rate and cracking pressure requirements specified in item 1(g) of **Table 1, located in Attachment 1** to this permit, and for the static pressure performance requirement in item 1(h) of **Table 1** to this permit.
    (3) The permittee must comply with the testing requirements specified in **Condition 14** of this permit.

16. Pursuant to 40 CFR §63.11120(c), performance tests conducted for 40 CFR 63, subpart CCCCCC shall be conducted under such conditions as the Technical Secretary specifies to the permittee based on representative performance (i.e., performance based on normal operating conditions) of the affected source. Upon request, the permittee shall make available to the Technical Secretary such records as may be necessary to determine the conditions of performance tests.

17. Pursuant to 40 CFR §63.11120(d), gasoline cargo tanks, owned or operated by the permittee, subject to the provisions of **Table 2, located in Attachment 1**, must conduct annual certification testing according to the vapor tightness testing requirements in 40 CFR §63.11092(f).

18. Pursuant to 40 CFR §63.11124(b), the permittee must comply with paragraphs (1) through (5) of this condition, except that instead of notifying the Administrator, notices shall be provided to the Technical Secretary at the addresses specified in **Condition 38** of this permit.
    (1) The permittee must submit an Initial Notification that you are subject to this subpart by May 9, 2008, or at the time you become subject to the control requirements in 40 CFR §63.11118. The Initial Notification must contain the information specified in paragraphs (1)(i) through (iii) of this condition.
        (i) The name and address of the owner and the operator.
        (ii) The address (i.e., physical location) of the GDF.
        (iii) A statement that the notification is being submitted in response to 40 CFR 63, subpart CCCCCC and identifying the requirements in paragraphs (a) through (c) of 40 CFR §63.11118 that apply to the permittee.
    (2) The permittee must submit a Notification of Compliance Status to the Technical Secretary, in accordance with the schedule specified in 40 CFR §63.9(h). The Notification of Compliance Status must be signed by a responsible official who must certify its accuracy, must indicate whether the source has complied with the requirements of this subpart, and must indicate whether the facility's throughput is determined based on the volume of gasoline loaded into all storage tanks or on the volume of gasoline dispensed from all storage tanks. If the facility is in compliance with the requirements of 40 CFR 63, subpart CCCCCC at the time the Initial Notification required under paragraph (1) of this condition is due, the Notification of Compliance Status may be submitted in lieu of the Initial Notification provided it contains the information required under paragraph (1) of this condition.
    (3) If, prior to January 10, 2008, the permittee satisfies the requirements in both paragraphs (3)(i) and (ii) of this condition, the permittee is not required to submit an Initial Notification or a Notification of Compliance Status under paragraph (1) or paragraph (2) of this condition.
        (i) The permittee operates a vapor balance system at your gasoline dispensing facility that meets the requirements of either paragraphs (3)(i)(A) or (3)(i)(B) of this condition.
            (A) Achieves emissions reduction of at least 90 percent.
            (B) Operates using management practices at least as stringent as those in Table 1 to this subpart.
        (ii) Your gasoline dispensing facility is in compliance with an enforceable State, local, or tribal rule or permit that contains requirements of either paragraphs (3)(i)(A) or (3)(i)(B) of this condition.
    (4) The permittee must submit a Notification of Performance Test, as specified in 40 CFR §63.9(e), prior to initiating testing required by §63.11120(a) and (b).
    (5) The permittee must submit additional notifications specified in 40 CFR §63.9, as applicable.

19. Pursuant to 40 CFR §63.11125(a), the permittee must keep records of all tests performed under **Conditions 14 and 15**.

20. Pursuant to 40 CFR §63.11125(b), the permittee shall keep records required under **Condition 19** of this permit for a period of 5 years and shall make these records available for inspection by the Technical Secretary or his representative(s) during the course of a site visit.

21. Pursuant to 40 CFR §63.11125(c), each gasoline cargo tank subject to the management practices in **Table 2, located in Attachment 1** must keep records documenting vapor tightness testing for a period of 5 years. Documentation must include each of the items specified in 40 CFR §63.11094(b)(2)(i) through (viii). Records of vapor tightness testing must be retained as specified in either paragraph (1) or paragraph (2) of this condition.

    (1) The owner or operator must keep all vapor tightness testing records with the cargo tank.
    (2) As an alternative to keeping all records with the cargo tank, the permittee may comply with the requirements of paragraphs (2)(i) and (ii) of this condition.
        (i) The permittee may keep records of only the most recent vapor tightness test with the cargo tank, and keep records for the previous 4 years at their office or another central location.
        (ii) Vapor tightness testing records that are kept at a location other than with the cargo tank must be instantly available (e.g., via e-mail or facsimile) to the Technical Secretary's delegated representative during the course of a site visit or within a mutually agreeable time frame. Such records must be an exact duplicate image of the original paper copy record with certifying signatures.

22. Pursuant to 40 CFR §63.11125(d), the permittee shall keep records as specified in paragraphs (1) and (2) of this condition.

    (1) Records of the occurrence and duration of each malfunction of operation (i.e., process equipment) or the air pollution control and monitoring equipment.
    (2) Records of actions taken during periods of malfunction to minimize emissions in accordance with 40 CFR §63.11115(a), including corrective actions to restore malfunctioning process and air pollution control and monitoring equipment to its normal or usual manner of operation.

23. Pursuant to 40 CFR §63.11126(a), the permittee shall report to the Technical Secretary the results of all volumetric efficiency tests required under **Condition 15**. Reports submitted under this condition must be submitted within 180 days of the completion of the performance testing.

24. Pursuant to 40 CFR §63.11126(b), the permittee shall report to the Technical Secretary , by March 15 of each year, the number, duration, and a brief description of each type of malfunction which occurred during the previous calendar year and which caused or may have caused any applicable emission limitation to be exceeded. The report must also include a description of actions taken by the permittee during a malfunction of an affected source to minimize emissions in accordance with 40 CFR §63.11115(a), including actions taken to correct a malfunction. No report is necessary for a calendar year in which no malfunctions occurred.

25. Pursuant to 40 CFR §63.11130, **Table 3, located in Attachment 1** to this permit, shows which parts of the General Provisions (40 CFR part 63, subpart A) apply to the permittee.

26. Pursuant to TAPCR 1200-03-18-.24(1)(a)1 and 1200-03-18-.24(1)(a)2, this facility, located in Jefferson County and exceeding the applicability threshold specified in Part 1200-03-18-.24(1)(b)2 and Subpart 1200-03-18-.24(1)(b)3(ii) shall be subject to all of the respective provisions of TAPCR 1200-03-18-.24 for facilities exceeding this applicability threshold and shall remain subject to these provisions even if throughput later falls below this threshold or if ownership of the facility is transferred.

27. Pursuant to TAPCR 1200-03-18-.24(3)(a)1, all gasoline storage vessels at this facility shall be loaded by submerged fill. The term "submerged fill" is defined in paragraph 1200-03-18-.01(76) as the method of filling a delivery vessel or storage vessel where product enters within 5.9 inches of the bottom of the delivery or storage vessel. Bottom filling of delivery and storage vessels is included in this definition.

28. Pursuant to TAPCR 1200-03-18-.24(3)(a)2, all vapor lines on the gasoline storage vessels shall be equipped with closures that automatically seal upon disconnect.

29. Pursuant to TAPCR 1200-03-18-.24(3)(a)3, all gasoline storage vessels at this facility shall be served by a Stage I vapor recovery system, approved by the Technical Secretary, and designed, installed, and maintained to recover gasoline vapors displaced during transfer of gasoline from a tank truck to a storage tank.

30. Pursuant to TAPCR 1200-03-18-.24(3)(a)4, if a gasoline storage vessel gauging well separate from the fill tube is used for manual measurement, it shall be provided with a submerged drop tube that extends to within 5.9 inches of the gasoline storage vessel bottom.

31. Pursuant to TAPCR 1200-03-18-.24(3)(a)5, liquid fill connections for all systems shall be equipped with vapor-tight caps.

32. Pursuant to TAPCR 1200-03-18-.24(5)(b)3, required permits shall be kept at the facility for which the permits are issued.

33. Pursuant to TAPCR 1200-03-18-.24(5)(c)1, the permittee shall report each occurrence of excess emissions as required in **Attachment 6** to the Technical Secretary within 30 calendar days of becoming aware of such occurrence. Excess emissions shall mean any emissions caused by a deficiency in meeting the standards described in Rule 1200-03-18-.24(3).

34. This source shall comply with all applicable state and federal air pollution regulations. This includes, but is not limited to, federal regulations published under 40 CFR 63 for sources of hazardous air pollutants and 40 CFR 60, New Source Performance Standards. TAPCR 1200-03-09-.03(8)

35. This source shall operate in accordance with the terms of this permit and the information submitted in the approved permit application. TAPCR 1200-03-09-.02(6)

36. This permit is valid only at this location. TAPCR 1200-03-09-.03(6)

37. This permit shall serve as a temporary operating permit from initial start-up to the receipt of a standard operating permit (regardless of the expiration date), provided the operating permit is applied for within thirty (30) days of initial start-up and the conditions of this permit and any applicable emission standards are met.

    TAPCR 1200-03-09-.02(3)(b)

38. The permittee shall certify the start-up date of the air contaminant source regulated by this permit by submitting

A COPY OF ALL PAGES OF THIS PERMIT,

with the information required in A) and B) of this condition completed, to the Technical Secretary's representatives listed below:

A) DATE OF START-UP: _____ / ____ / _____
month day year

B) Anticipated operating rate: ____ percent of maximum rated capacity

For the purpose of complying with this condition, "start-up" of the air contaminant source shall be the date of the setting in operation of the source for the dispensing of product for sale.

The undersigned represents that he/she has the full authority to represent and bind the permittee in environmental permitting affairs. The undersigned further represents that the above provided information is true to the best of his/her knowledge and belief.

Signature		Date
Signer's name (type or print)	Title	Phone (with area code)

Note: This certification is not an application for an operating permit. At a minimum, the appropriate application form(s) must be submitted requesting an operating permit. The application must be submitted in accordance with the requirements of this permit.

The completed certification shall be mailed to the Permit Program at the address listed below, no later than thirty (30) days after the air contaminant source is started-up.

Division of Air Pollution Control
East Tennessee Permit Program
William R. Snodgrass Tennessee Tower
312 Rosa L. Parks Avenue, 15th Floor
Nashville, TN 37243

Or submit an electronic copy (PDF) of the start-up certification by email to: Air.Pollution.Control@tn.gov

As an alternative to submittal of paper copies, the electronically-submitted start-up certification must comply with the specified deadlines as required for a paper copy submittal. A color copy of the document with blue ink signatures is preferred, but a black- and –white submittal is acceptable. The Air Pollution Control e-mail address will send an automatic reply to verify that the electronic submittal was received. If an automatic reply is not received, you may wish to re-send or confirm that the e-mail submittal was received by contacting the Division of Air Pollution Control at (615) 532-0554.

TAPCR 1200-03-09-.02(3)(b)

(end of conditions)

ATTACHMENT 1

TABLES 1 - 3

Table 1—Applicability Criteria and Management Practices for Gasoline Dispensing Facilities With Monthly Throughput of 100,000 Gallons of Gasoline or More	
If you own or operate	**Then you must**
1. A new, reconstructed, or existing GDF subject to 40CFR §63.11118	Install and operate a vapor balance system on your gasoline storage tanks that meets the design criteria in paragraphs (a) through (h).
	(a) All vapor connections and lines on the storage tank shall be equipped with closures that seal upon disconnect.
	(b) The vapor line from the gasoline storage tank to the gasoline cargo tank shall be vapor-tight, as defined in 40CFR §63.11132.
	(c) The vapor balance system shall be designed such that the pressure in the tank truck does not exceed 18 inches water pressure or 5.9 inches water vacuum during product transfer.
	(d) The vapor recovery and product adaptors, and the method of connection with the delivery elbow, shall be designed so as to prevent the over-tightening or loosening of fittings during normal delivery operations.
	(e) If a gauge well separate from the fill tube is used, it shall be provided with a submerged drop tube that extends the same distance from the bottom of the storage tank as specified in **Condition 30** of this permit.
	(f) Equip the liquid fill connections for all systems with caps that are vapor-tight, as defined in 40CFR §63.11132.
	(g) Pressure/vacuum (PV) vent valves shall be installed on the storage tank vent pipes. The pressure specifications for PV vent valves shall be: a positive pressure setting of 2.5 to 6.0 inches of water and a negative pressure setting of 6.0 to 10.0 inches of water. The total leak rate of all PV vent valves at an affected facility, including connections, shall not exceed 0.17 cubic foot per hour at a pressure of 2.0 inches of water and 0.63 cubic foot per hour at a vacuum of 4 inches of water.
	(h) The vapor balance system shall be capable of meeting the static pressure performance requirement of the following equation:
	$Pf = 2e^{-500.887/v}$
	Where:
	Pf = Minimum allowable final pressure, inches of water.
	v = Total ullage affected by the test, gallons.
	e = Dimensionless constant equal to approximately 2.718.
	2 = The initial pressure, inches water.
2. A new or reconstructed GDF, or any storage tank(s) constructed after November 9, 2006, at an existing affected facility subject to 40CFR §63.11118	Equip your gasoline storage tanks with a dual-point vapor balance system, as defined in 40CFR §63.11132, and comply with the requirements of item 1 in this Table.

Note to Table 1: The management practices specified in this Table are not applicable if the permittee is complying with the requirements in 40 CFR §63.0008(b)(2), except that if the permittee is complying with the requirements in 40 CFR §63.0008(b)(2)(i)(B), the permittee must operate using management practices at least as stringent as those listed in this Table.

Table 2—Applicability Criteria and Management Practices for Gasoline Cargo Tanks Unloading at Gasoline Dispensing Facilities With Monthly Throughput of 100,000 Gallons of Gasoline or More	
If you own or operate	**Then you must**
A gasoline cargo tank	Not unload gasoline into a storage tank at a GDF subject to the control requirements in this subpart unless the following conditions are met:
	(i) All hoses in the vapor balance system are properly connected,
	(ii) The adapters or couplers that attach to the vapor line on the storage tank have closures that seal upon disconnect,
	(iii) All vapor return hoses, couplers, and adapters used in the gasoline delivery are vapor-tight,
	(iv) All tank truck vapor return equipment is compatible in size and forms a vapor-tight connection with the vapor balance equipment on the GDF storage tank, and
	(v) All hatches on the tank truck are closed and securely fastened.
	(vi) The filling of storage tanks at GDF shall be limited to unloading by vapor-tight gasoline cargo tanks. Documentation that the cargo tank has met the specifications of EPA Method 27 shall be carried on the cargo tank as specified in 40 CFR §63.11125(c).

Table 3—Applicability of General Provisions			
Citation	**Subject**	**Brief description**	**Applies to subpart CCCCCC**
40CFR §63.1	Applicability	Initial applicability determination; applicability after standard established; permit requirements; extensions, notifications	Yes, specific requirements given in 40CFR §63.11111.
40CFR §63.1(c)(2)	Title V Permit	Requirements for obtaining a title V permit from the applicable permitting authority	Yes, 40CFR §63.11111(f) of subpart CCCCCC exempts identified area sources from the obligation to obtain title V operating permits.
40CFR §63.2	Definitions	Definitions for part 63 standards	Yes, additional definitions in 40CFR §63.11132.
40CFR §63.3	Units and Abbreviations	Units and abbreviations for part 63 standards	Yes.
40CFR §63.4	Prohibited Activities and Circumvention	Prohibited activities; Circumvention, severability	Yes.
40CFR §63.5	Construction/Reconstruction	Applicability; applications; approvals	Yes except that these notifications are not required for facilities subject to 40 CFR §63.11116.
40CFR §63.6(a)	Compliance with Standards/Operation & Maintenance—Applicability	General Provisions apply unless compliance extension; General Provisions apply to area sources that become major	Yes.
40CFR §63.6(b)(1)-(4)	Compliance Dates for New and Reconstructed Sources	Standards apply at effective date; 3 years after effective date; upon startup; 10 years after construction or reconstruction commences for CAA section 112(f)	Yes.
40CFR §63.6(b)(5)	Notification	Must notify if commenced construction or reconstruction after proposal	Yes.
40CFR §63.6(b)(6)	[Reserved]		
40CFR §63.6(b)(7)	Compliance Dates for New and Reconstructed Area Sources That Become Major	Area sources that become major must comply with major source standards immediately upon becoming major, regardless of whether required to comply when they were an area source	No.
40CFR §63.6(c)(1)-(2)	Compliance Dates for Existing Sources	Comply according to date in this subpart, which must be no later than 3 years after effective date; for CAA section 112(f) standards, comply within 90 days of effective date unless compliance extension	No, 40CFR §63.11113 specifies the compliance dates.
40CFR §63.6(c)(3)-(4)	[Reserved]		
40CFR §63.6(c)(5)	Compliance Dates for Existing Area Sources That Become Major	Area sources That become major must comply with major source standards by date indicated in this subpart or by equivalent time period (e.g., 3 years)	No.
40CFR §63.6(d)	[Reserved]		
40CFR §63.6(e)(1)	Operation & Maintenance	Operate to minimize emissions at all times; correct malfunctions as soon as practicable; and operation and maintenance requirements independently enforceable; information Technical Secretary will use to determine if operation and maintenance requirements were met	Yes.
40 CFR §63.6(e)(1)(i)	General duty to minimize emissions	Operate to minimize emissions at all times; information Technical Secretary will use to determine if operation and maintenance requirements were met.	No, See 40 CFR §63.11115 for general duty requirements.
40 CFR §63.6(e)(1)(ii)	Requirement to correct malfunctions ASAP	Owner or operator must correct malfunctions as soon as possible.	No
40CFR §63.6(e)(2)	[Reserved]		
40CFR §63.6(e)(3)	Startup, Shutdown, and Malfunction (SSM) Plan	Requirement for SSM plan; content of SSM plan; actions during SSM	No.
40CFR §63.6(f)(1)	Compliance Except During SSM	The permittee must comply with emission standards at all times except during SSM	No.

Table 3—Applicability of General Provisions			
Citation	**Subject**	**Brief description**	**Applies to subpart CCCCCC**
40CFR §63.6(f)(2)-(3)	Methods for Determining Compliance	Compliance based on performance test, operation and maintenance plans, records, inspection	Yes.
40CFR §63.6(g)(1)-(3)	Alternative Standard	Procedures for getting an alternative standard	Yes.
40CFR §63.6(h)(1)	Compliance with Opacity/Visible Emission (VE) Standards	The permittee must comply with opacity/VE standards at all times except during SSM	No.
40CFR §63.6(h)(2)(i)	Determining Compliance with Opacity/VE Standards	If standard does not State test method, use EPA Method 9 for opacity in appendix A of part 60 of this chapter and EPA Method 22 for VE in appendix A of part 60 of this chapter	No.
40CFR §63.6(h)(2)(ii)	[Reserved]		
40CFR §63.6(h)(2)(iii)	Using Previous Tests To Demonstrate Compliance With Opacity/VE Standards	Criteria for when previous opacity/VE testing can be used to show compliance with this subpart	No.
40CFR §63.6(h)(3)	[Reserved]		
40CFR §63.6(h)(4)	Notification of Opacity/VE Observation Date	Must notify Technical Secretary of anticipated date of observation	No.
40CFR §63.6(h)(5)(i), (iii)-(v)	Conducting Opacity/VE Observations	Dates and schedule for conducting opacity/VE observations	No.
40CFR §63.6(h)(5)(ii)	Opacity Test Duration and Averaging Times	Must have at least 3 hours of observation with 30 6-minute averages	No.
40CFR §63.6(h)(6)	Records of Conditions During Opacity/VE Observations	Must keep records available and allow Technical Secretary to inspect	No.
40CFR §63.6(h)(7)(i)	Report Continuous Opacity Monitoring System (COMS) Monitoring Data From Performance Test	Must submit COMS data with other performance test data	No.
40CFR §63.6(h)(7)(ii)	Using COMS Instead of EPA Method 9	Can submit COMS data instead of EPA Method 9 results even if rule requires EPA Method 9 in appendix A of part 60 of this chapter, but must notify Technical Secretary before performance test	No.
40CFR §63.6(h)(7)(iii)	Averaging Time for COMS During Performance Test	To determine compliance, must reduce COMS data to 6-minute averages	No.
40CFR §63.6(h)(7)(iv)	COMS Requirements	Owner/operator must demonstrate that COMS performance evaluations are conducted according to 40CFR §63.8(e); COMS are properly maintained and operated according to 40CFR §63.8(c) and data quality as 40CFR §63.8(d)	No.
40CFR §63.6(h)(7)(v)	Determining Compliance with Opacity/VE Standards	COMS is probable but not conclusive evidence of compliance with opacity standard, even if EPA Method 9 observation shows otherwise. Requirements for COMS to be probable evidence-proper maintenance, meeting Performance Specification 1 in appendix B of part 60 of this chapter, and data have not been altered	No.
40CFR §63.6(h)(8)	Determining Compliance with Opacity/VE Standards	Technical Secretary will use all COMS, EPA Method 9 (in appendix A of part 60 of this chapter), and EPA Method 22 (in appendix A of part 60 of this chapter) results, as well as information about operation and maintenance to determine compliance	No.
40CFR §63.6(h)(9)	Adjusted Opacity Standard	Procedures for Technical Secretary to adjust an opacity standard	No.
40CFR §63.6(i)(1)-(14)	Compliance Extension	Procedures and criteria for Technical Secretary to grant compliance extension	Yes.
40CFR §63.6(j)	Presidential Compliance Exemption	President may exempt any source from requirement to comply with this subpart	Yes.
40CFR §63.7(a)(2)	Performance Test Dates	Dates for conducting initial performance testing; must conduct 180 days after compliance date	Yes.

Table 3—Applicability of General Provisions			
Citation	**Subject**	**Brief description**	**Applies to subpart CCCCCC**
40CFR §63.7(a)(3)	CAA Section 114 Authority	Technical Secretary may require a performance test under CAA section 114 at any time	Yes.
40CFR §63.7(b)(1)	Notification of Performance Test	Must notify Technical Secretary 60 days before the test	Yes.
40CFR §63.7(b)(2)	Notification of Re-scheduling	If have to reschedule performance test, must notify Technical Secretary of rescheduled date as soon as practicable and without delay	Yes.
40CFR §63.7(c)	Quality Assurance (QA)/Test Plan	Requirement to submit site-specific test plan 60 days before the test or on date Technical Secretary agrees with; test plan approval procedures; performance audit requirements; internal and external QA procedures for testing	Yes.
40CFR §63.7(d)	Testing Facilities	Requirements for testing facilities	Yes.
40CFR §63.7(e)(1)	Conditions for Conducting Performance Tests	Performance test must be conducted under representative conditions.	No, 40 CFR §63.11120(c) specifies conditions for conducting performance tests.
40CFR §63.7(e)(2)	Conditions for Conducting Performance Tests	Must conduct according to this subpart and EPA test methods unless ***Administrator*** approves alternative	Yes.
40CFR §63.7(e)(3)	Test Run Duration	Must have three test runs of at least 1 hour each; compliance is based on arithmetic mean of three runs; conditions when data from an additional test run can be used	Yes.
40CFR §63.7(f)	Alternative Test Method	Procedures by which ***Administrator*** can grant approval to use an intermediate or major change, or alternative to a test method	Yes.
40CFR §63.7(g)	Performance Test Data Analysis	Must include raw data in performance test report; must submit performance test data 60 days after end of test with the Notification of Compliance Status; keep data for 5 years	Yes.
40CFR §63.7(h)	Waiver of Tests	Procedures for Technical Secretary to waive performance test	Yes.
40CFR §63.8(a)(1)	Applicability of Monitoring Requirements	Subject to all monitoring requirements in standard	Yes.
40CFR §63.8(a)(2)	Performance Specifications	Performance Specifications in appendix B of 40 CFR part 60 apply	Yes.
40CFR §63.8(a)(3)	[Reserved]		
40CFR §63.8(a)(4)	Monitoring of Flares	Monitoring requirements for flares in 40CFR §63.11 apply	Yes.
40CFR §63.8(b)(1)	Monitoring	Must conduct monitoring according to standard unless Technical Secretary approves alternative	Yes.
40CFR §63.8(b)(2)-(3)	Multiple Effluents and Multiple Monitoring Systems	Specific requirements for installing monitoring systems; must install on each affected source or after combined with another affected source before it is released to the atmosphere provided the monitoring is sufficient to demonstrate compliance with the standard; if more than one monitoring system on an emission point, must report all monitoring system results, unless one monitoring system is a backup	No.
40CFR §63.8(c)(1)	Monitoring System Operation and Maintenance	Maintain monitoring system in a manner consistent with good air pollution control practices	No.
40CFR §63.8(c)(1)(i)-(iii)	Operation and Maintenance of Continuous Monitoring Systems (CMS)	Must maintain and operate each CMS as specified in 40 CFR §63.6(e)(1); must keep parts for routine repairs readily available; must develop a written SSM plan for CMS, as specified in 40 CFR §63.6(e)(1).	No.
40CFR §63.8(c)(2)-(8)	CMS Requirements	Must install to get representative emission or parameter measurements; must verify operational status before or at performance test	No.

Table 3—Applicability of General Provisions			
Citation	**Subject**	**Brief description**	**Applies to subpart CCCCCC**
40CFR §63.8(d)	CMS Quality Control	Requirements for CMS quality control, including calibration, etc.; must keep quality control plan on record for 5 years; keep old versions for 5 years after revisions	No.
40CFR §63.8(e)	CMS Performance Evaluation	Notification, performance evaluation test plan, reports	No.
40CFR §63.8(f)(1)-(5)	Alternative Monitoring Method	Procedures for Technical Secretary to approve alternative monitoring	No.
40CFR §63.8(f)(6)	Alternative to Relative Accuracy Test	Procedures for Technical Secretary to approve alternative relative accuracy tests for continuous emissions monitoring system (CEMS)	No.
40CFR §63.8(g)	Data Reduction	COMS 6-minute averages calculated over at least 36 evenly spaced data points; CEMS 1 hour averages computed over at least 4 equally spaced data points; data that cannot be used in average	No.
40CFR §63.9(a)	Notification Requirements	Applicability and State delegation	Yes.
40CFR §63.9(b)(1)-(2), (4)-(5)	Initial Notifications	Submit notification within 120 days after effective date; notification of intent to construct/reconstruct, notification of commencement of construction/reconstruction, notification of startup; contents of each	Yes.
40CFR §63.9(c)	Request for Compliance Extension	Can request if cannot comply by date or if installed best available control technology or lowest achievable emission rate	Yes.
40CFR §63.9(d)	Notification of Special Compliance Requirements for New Sources	For sources that commence construction between proposal and promulgation and want to comply 3 years after effective date	Yes.
40CFR §63.9(e)	Notification of Performance Test	Notify Technical Secretary 60 days prior	Yes.
40CFR §63.9(f)	Notification of VE/Opacity Test	Notify Technical Secretary 30 days prior	No.
40CFR §63.9(g)	Additional Notifications when Using CMS	Notification of performance evaluation; notification about use of COMS data; notification that exceeded criterion for relative accuracy alternative	Yes, however, there are no opacity standards.
40CFR §63.9(h)(1)-(6)	Notification of Compliance Status	Contents due 60 days after end of performance test or other compliance demonstration, except for opacity/VE, which are due 30 days after; when to submit to Federal vs. State authority	Yes, however, there are no opacity standards.
40CFR §63.9(i)	Adjustment of Submittal Deadlines	Procedures for Technical Secretary to approve change when notifications must be submitted	Yes.
40CFR §63.9(j)	Change in Previous Information	Must submit within 15 days after the change	Yes.
40CFR §63.10(a)	Recordkeeping/Reporting	Applies to all, unless compliance extension; when to submit to Federal vs. State authority; procedures for owners of more than one source	Yes.
40CFR §63.10(b)(1)	Recordkeeping/Reporting	General requirements; keep all records readily available; keep for 5 years	Yes.
40 CFR §63.10(b)(2)(i)	Records related to SSM	Recordkeeping of occurrence and duration of startups and shutdowns	No
40 CFR §63.10(b)(2)(ii)	Records related to SSM	Recordkeeping of malfunctions.	No, See 40 CFR §63.11125(d) for recordkeeping of (1) occurrence and duration and (2) actions taken during malfunction.
40CFR §63.10(b)(2)(iii)	Maintenance records	Recordkeeping of maintenance on air pollution control and monitoring equipment	Yes
40 CFR §63.10(b)(2)(iv)	Records Related to SSM	Actions taken to minimize emissions during SSM	No.
40 CFR §63.10(b)(2)(v)	Records Related to SSM	Actions taken to minimize emissions during SSM	No
40CFR §63.10(b)(2)(vi)-(xi)	CMS Records	Malfunctions, inoperative, out-of-control periods	No.

Table 3—Applicability of General Provisions			
Citation	**Subject**	**Brief description**	**Applies to subpart CCCCCC**
40CFR §63.10(b)(2)(xii)	Records	Records when under waiver	Yes.
40CFR §63.10(b)(2)(xiii)	Records	Records when using alternative to relative accuracy test	Yes.
40CFR §63.10(b)(2)(xiv)	Records	All documentation supporting Initial Notification and Notification of Compliance Status	Yes.
40CFR §63.10(b)(3)	Records	Applicability determinations	Yes.
40CFR §63.10(c)	Records	Additional records for CMS	No.
40CFR §63.10(d)(1)	General Reporting Requirements	Requirement to report	Yes.
40CFR §63.10(d)(2)	Report of Performance Test Results	When to submit to Federal or State authority	Yes.
40CFR §63.10(d)(3)	Reporting Opacity or VE Observations	What to report and when	No.
40CFR §63.10(d)(4)	Progress Reports	Must submit progress reports on schedule if under compliance extension	Yes.
40CFR §63.10(d)(5)	SSM Reports	Contents and submission	No, See 40 CFR §63.11126(b) for malfunction reporting requirements.
40CFR §63.10(e)(1)-(2)	Additional CMS Reports	Must report results for each CEMS on a unit; written copy of CMS performance evaluation; two-three copies of COMS performance evaluation	No.
40 CFR §63.10(e)3)(i)-(iii)	Reports	Schedule for reporting excess emissions	No
40CFR §63.10(e)(3)(iv)-(v)	Excess Emissions Reports	Requirement to revert to quarterly submission if there is an excess emissions and parameter monitor exceedances (now defined as deviations); provision to request semiannual reporting after compliance for 1 year; submit report by 30th day following end of quarter or calendar half; if there has not been an exceedance or excess emissions (now defined as deviations), report contents in a statement that there have been no deviations; must submit report containing all of the information 40 CFR §§63.8(c)(7)-(8) and 63.10(c)(5)-(13)	No
40CFR §63.10(e)(3)(iv)-(v)	Excess Emissions Reports	Requirement to revert to quarterly submission if there is an excess emissions and parameter monitor exceedances (now defined as deviations); provision to request semiannual reporting after compliance for 1 year; submit report by 30th day following end of quarter or calendar half; if there has not been an exceedance or excess emissions (now defined as deviations), report contents in a statement that there have been no deviations; must submit report containing all of the information in §40CFR §63.8(c)(7)-(8) and 63.10(c)(5)-(13)	No, 40CFR §63.11130(K) specifies excess emission events for this subpart.
40CFR §63.10(e)(3)(vi)-(viii)	Excess Emissions Report and Summary Report	Requirements for reporting excess emissions for CMS; requires all of the information in §40CFR §63.10(c)(5)-(13) and 63.8(c)(7)-(8)	No.
40CFR §63.10(e)(4)	Reporting COMS Data	Must submit COMS data with performance test data	No.
40CFR §63.10(f)	Waiver for Recordkeeping/Reporting	Procedures for ***Administrator*** to waive	Yes.
40CFR §63.11(b)	Flares	Requirements for flares	No.
40CFR §63.12	Delegation	State authority to enforce standards	Yes.
40CFR §63.13	Addresses	Addresses where reports, notifications, and requests are sent	Yes.
40CFR §63.14	Incorporations by Reference	Test methods incorporated by reference	Yes.
40CFR §63.15	Availability of Information	Public and confidential information	Yes.

ATTACHMENT 2

California Air Resources Board
Vapor Recovery Test Procedure TP–201.1E,
Leak Rate and Cracking Pressure of Pressure/Vacuum Vent Valves,
adopted October 8, 2003.

California Environmental Protection Agency

Air Resources Board

Vapor Recovery Test Procedure

TP-201.1E

Leak Rate and Cracking Pressure of Pressure/Vacuum Vent Valves

Adopted: October 8, 2003

California Environmental Protection Agency
Air Resources Board

Vapor Recovery Test Procedure

TP-201.1E

Leak Rate and Cracking Pressure of Pressure/Vacuum Vent Valves

Definitions common to all certification and test procedures are in:

D-200 Definitions for Vapor Recovery Procedures

For the purpose of this procedure, the term "CARB" refers to the California Air Resources Board, and the term "Executive Officer" refers to the CARB Executive Officer or his or her authorized representative or designate.

1. PURPOSE AND APPLICABILITY

The purpose of this procedure is to determine the pressure and vacuum at which a Pressure-/Vacuum Vent Valve (P/V Valve) actuates, and to determine the volumetric leak rate at a given pressure as specified in CP-201, Certification Procedure for Vapor Recovery Systems at Gasoline Dispensing Facilities. This procedure is applicable for certification and compliance testing of P/V Valves.

2. PRINCIPLE AND SUMMARY OF TEST PROCEDURE

The volumetric leak rate of a P/V Valve is determined by measuring the positive and negative flow rates at corresponding pressures. The positive and negative cracking pressures of the valve are determined by measuring the pressure at which the P/V Valve opens to atmospheric pressure. With the exception of certification testing performed by the Executive Officer, these measurements are determined by removing the P/V Valve and conducting the test on a test stand. A flow metering device is used to introduce flow while measuring pressure.

3. BIASES AND INTERFERENCES

3.1 Installing a P/V Valve onto the test stand in a manner that is not in accordance with the manufacturer's recommended installation instructions can produce erroneous results.

3.2 Leaks in the test stand or test equipment can produce erroneous results.

4. SENSITIVITY, RANGE, AND PRECISION

4.1 Electronic Pressure Measuring Device. Minimum sensitivity shall be 0.01 inches H_2O with a maximum full-scale range of 20 inches H_2O and minimum accuracy of plus or minus 0.50 percent full-scale range.

4.2 Flow Meter. The measurable leak rate is dependent upon the sensitivity, range and precision of the flow meter used for testing. For electronic flow metering devices, the minimum sensitivity shall be 1.0 ml/min (0.0021 CFH) with a minimum full-scale accuracy of ±1.0 percent. For rotameters, the flow meter minimum sensitivity shall be 12.5 ml/min (.026 CFH) with minimum accuracy of ± 5 percent full-scale. The device scale shall be 150mm (5.91 inches) tall to provide a sufficient number of graduations for readability.

5. EQUIPMENT

5.1 Nitrogen. Use commercial grade gaseous nitrogen in a high-pressure cylinder equipped with a pressure regulator and one (1.00) psig pressure relief valve. As an alternative, compressed air may be used to pressurize to the minimum working pressure required by the Flow Metering device.

5.2 Ballast Tank. If required, use a commercially available tank (2 gallon minimum), capable of being pressurized or evacuated (placed under vacuum) to the minimum working pressure required by the flow-metering device(s).

5.3 Vacuum Pump or Vacuum Generating Device. Use a commercially available vacuum pump or equivalent, capable of evacuating the ballast tank or test stand to the minimum working pressure required by the flow-metering device.

5.4 Electronic Pressure Gauge. Use an electronic pressure gauge or digital manometer that conforms to the minimum requirements listed in section 4 to measure the pressure inside of the test stand.

5.5 Flow Metering Device(s). Use either an electronic flow-metering device or Rotameter as described below to measure or introduce a volumetric flow rate. Although the use of either type of instrument is allowed, electronic flow metering devices provide higher accuracy and precision. For the purpose of certification testing, only electronic flow metering devices shall be used.

5.5.1 Electronic Flow Metering Device. Use a Mass Flow Meter that conforms to the minimum requirements listed in section 4 to introduce nitrogen or compressed air into the test stand. The Mass Flow Meter shall be equipped with a high precision needle valve to accurately adjust the flow settings. The meter may be used for both positive and negative flow rates by reconfiguring the pressure or vacuum lines.

5.5.2 Rotameters. Two (2) devices required. Use two Flow Meters with minimum specifications described in Section 4 to measure or introduce flow rates. One meter shall use a needle valve oriented for introducing positive flow and the other using an inverted needle valve for introducing vacuum.

5.6 Test Stand. If a bench test arrangement is used, use a test stand as shown in Figure 1**,** or equivalent, equipped with a 2-inch NPT threaded pipe on at least one end for attaching the P/V Valve in an upright position. If other than 2-inch NPT is required, use an adaptor to reduce or enlarge the 2 inch pipe. The test stand shall be equipped with at least two (2) ports used for introducing flow and measuring pressure. Use a bypass valve to enable the tester to set the required flow without

pressurizing the P/V Valve. Once the required flow rate is set, the bypass valve shall be closed to route the flow into the stand and pressurize the P/V Valve to check cracking pressure. Test stands may be constructed of various materials or dimensions. For certification testing conducted by Executive Officer only, the P/V valve may be isolated and tested in place at the facility.

6. PRE-TEST PROCEDURES

6.1 All pressure measuring device(s) shall be bench calibrated using a reference gauge, incline manometer or NIST traceable standard at least once every six (6) months. Calibration shall be performed at 20, 50, and 80 percent of full scale. Accuracy shall be within five (5) percent at each of these calibration points.

6.2 Electronic pressure measuring devices shall be calibrated immediately prior to testing using the zero gauge pressure adjustment knob located on the instrument.

6.3 The Flow Metering device(s) shall be calibrated using a reference meter or NIST traceable standard. Calibrations shall be performed at 20, 50, and 80 percent of full-scale range and shall take place at a minimum of once every six (6) months.

6.4 Leak check the test stand or test assembly prior to installing the P/V Valve.

(a) Install a 2-inch cap onto the NPT threads in place of the P/V Valve using pipe sealant or Teflon tape.

(b) Check all fittings for tightness and proper assembly.

(c) Slowly establish a stable gauge pressure in the test stand between 18.00 and 20.00 inches water column and allow pressure to stabilize.

(d) Check for leaks by applying a leak detection solution around all fittings and joints and by observing the pressure for pressure changes that may identify a leak. If no bubbles form, the test stand is leak tight.

(e) If soap bubbles form or the test stand pressure will not stabilize, repeat (a) through (d); it may be necessary to place the test apparatus in an environment that is free from the effects of wind or sunlight.

7. TEST PROCEDURE

7.1 Install the P/V Valve in an upright position following the installation instructions provided by the manufacturer. Incorrectly installing the valve will invalidate any pressure versus flow rate measurement.

7.2 Positive Leak Rate. Slowly open the control valve on the Positive Flow Metering device until the pressure stabilizes at the positive leak rate pressure described in CP-201 section 3. Maintain steady state pressure by using the control valve for at least ten (10) seconds. Steady state flow is indicated by a pressure change of no more than 0.05 inches H_2O on the pressure gauge. Record the final flow rate on the data sheet and close the control valve.

7.3 Positive Cracking Pressure. Open the bypass valve to route the flow outside of the test assembly. Open the control valve on the Positive Flow Metering device to establish a flow rate of 120 ml/min. Once flow is stabilized, close the bypass valve to route the flow into the test assembly. Observe the pressure. The P/V Valve should "crack" at a pressure within the range of positive cracking pressure as described in CP-201 section 3. This is marked by a sudden drop in pressure. Record the cracking pressure (highest pressure achieved***)*** on the data sheet and close the control valve.

7.4 Negative Leak Rate. Open the control valve on the Negative Flow Metering device until the pressure stabilizes at the negative leak rate pressure described in CP-201 section. Maintain steady state pressure by using the control valve for at least ten (10) seconds. Steady state flow is indicated by a pressure change of no more than 0.05 inches H_2O on the pressure gauge. Record the final flow rate on the data sheet and close the control valve.

7.5 Negative Cracking Pressure. Open the bypass valve to route the flow outside of the test assembly. Open the control valve on the Negative Flow Metering device to establish a negative flow rate of 200 ml/min. Once flow is stabilized, close the bypass valve to route the flow into the test assembly. Observe the pressure. The P/V Valve should "crack" at a pressure within the range of negative cracking pressure as described in CP-201 section 3. This is marked by a sudden drop in vacuum. Record the cracking pressure (highest vacuum achieved) on the data sheet and close the control valve.

8. POST-TEST PROCEDURES

8.1 Remove the P/V Valve from the test assembly.

8.2 Disassemble the pressure regulator from the compressed nitrogen cylinder (if used) and place the safety cap back on the cylinder.

8.3 Disassemble all remaining test equipment and store in a protected location.

9. CALCULATING RESULTS

9.1 Commonly used flow rate conversions:

1 CFH = 471.95 ml/min

Example: Convert 0.17 CFH to ml/min***:***

0.17 CFH (471.95) = 80 ml/min

1 ml/min = 0.00212 CFH

Example: Convert 100 ml/min to CFH:

100 ml/min (0.00212) = 0.21 CFH

10. REPORTING RESULTS

10.1 Record the station or location name, address and tester information on Form 1.

10.2 Record the P/V Valve manufacturer's name and model number on Form 1.

10.3 Record the results of the test(s) on Form 1. Use additional copies of Form 1 if needed to record additional P/V Valve tests.

10.4 Alternate data sheets or Forms may be used provided they contain the same parameters as identified on Form 1.

10.5 Use the formulas and example equation provided in Section 9 to convert the flow measurements into units of cubic feet per hour (CFH).

10.6 For certification testing, compare results to the performance standards listed in Table 3-1 of CP-201. For compliance testing, compare the results to the manufacturer's specifications listed on the P/V Valve for both leak rate and cracking pressure. For volumetric leak rates less than the manufacturers specified leakrate and cracking pressures within the manufacturers specified range, circle Pass on the data sheet where provided. If either the volumetric leak rate or cracking pressure exceeds the manufacturers specifications, circle Fail on the data sheet where provided.

11. ALTERNATIVE TEST PROCEDURES

This procedure shall be conducted as specified. Any modifications to this test procedure shall not be used unless prior written approval has been obtained from the Executive Officer pursuant to section 14 of CP-201.

Figure 1

Example of Test Stand

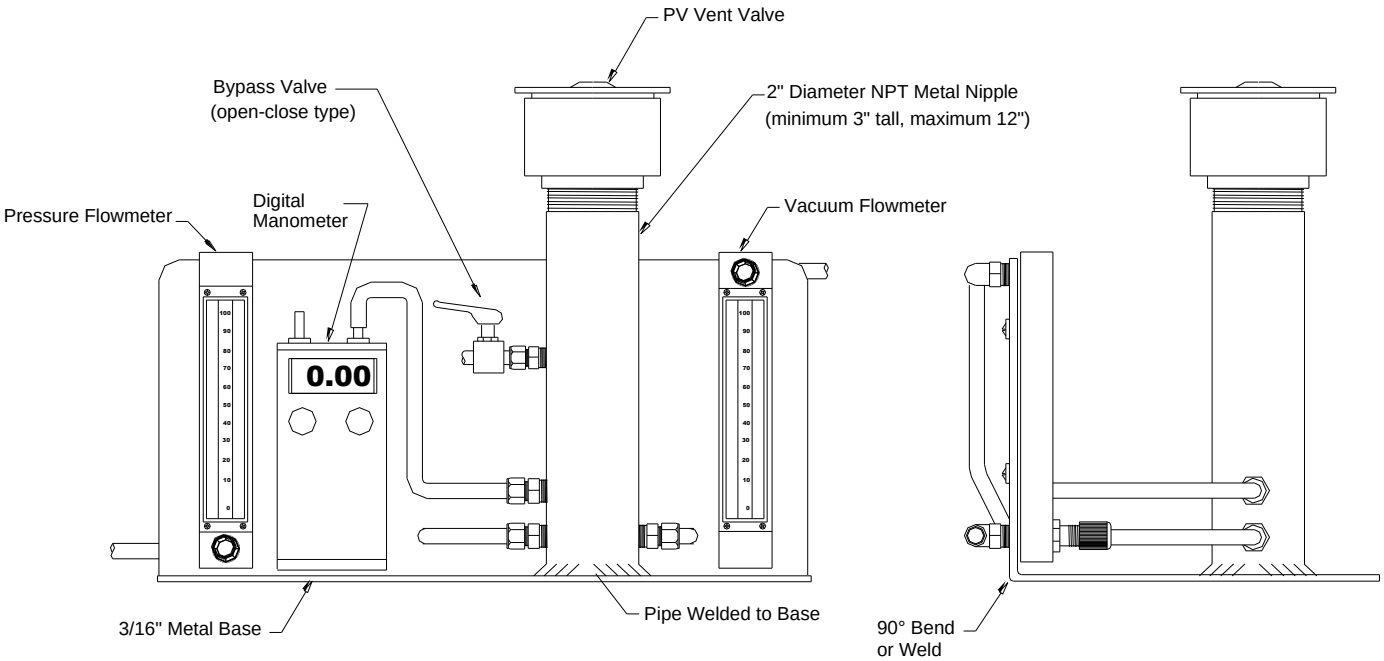

FLOW METER CONFIGURATION

SIDE VIEW

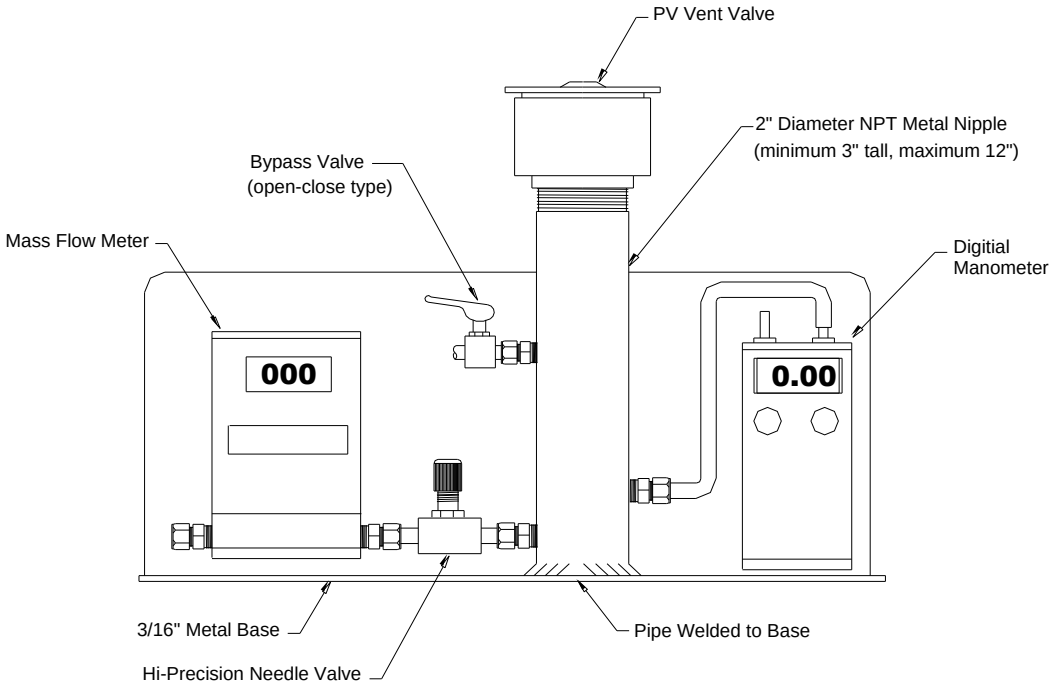

MASS FLOW METER CONFIGURATION

Form 1

Pressure/Vacuum (P/V) Vent Valve Data Sheet

Facility Name:	Test Date:
Address:	Test Company:
City :	Tester Name:

P/V Valve Manufacturer:	**Model Number:**	**Pass Fail**
Manufacturers Specified Positive Leak Rate (CFH):	**Manufacturers Specified Negative Leak Rate (CFH):**	
Measured Positive Leak Rate (CFH):	Measured Negative Leak Rate (CFH):	
Positive Cracking Pressure (in. H_2O):	Negative Cracking Pressure (in. H_2O):	

P/V Valve Manufacturer:	**Model Number:**	**Pass Fail**
Manufacturers Specified Positive Leak Rate (CFH):	**Manufacturers Specified Negative Leak Rate (CFH):**	
Measured Positive Leak Rate (CFH):	Measured Negative Leak Rate (CFH):	
Positive Cracking Pressure (in. H_2O):	Negative Cracking Pressure (in. H_2O):	

P/V Valve Manufacturer:	**Model Number:**	**Pass Fail**
Manufacturers Specified Positive Leak Rate (CFH):	**Manufacturers Specified Negative Leak Rate (CFH):**	
Measured Positive Leak Rate (CFH):	Measured Negative Leak Rate (CFH):	
Positive Cracking Pressure (in. H_2O):	Negative Cracking Pressure (in. H_2O):	

P/V Valve Manufacturer:	**Model Number:**	**Pass Fail**
Manufacturers Specified Positive Leak Rate (CFH):	**Manufacturers Specified Negative Leak Rate (CFH):**	
Measured Positive Leak Rate (CFH):	Measured Negative Leak Rate (CFH):	
Positive Cracking Pressure (in. H_2O):	Negative Cracking Pressure (in. H_2O):	

ATTACHMENT 3

California Air Resources Board
Vapor Recovery Test Procedure TP–201.3,

Amended: March 17, 1999

California Environmental Protection Agency

Air Resources Board

Vapor Recovery Test Procedure

TP-201.3

Determination of 2 Inch WC Static Pressure Performance of Vapor Recovery Systems of Dispensing Facilities

Adopted: April 12, 1996
Amended: March 17, 1999

California Environmental Protection Agency
Air Resources Board
Vapor Recovery Test Procedure

TP-201.3

Determination of 2 Inch WC Static Pressure Performance of Vapor Recovery Systems of Dispensing Facilities

1 APPLICABILITY

Definitions common to all certification and test procedures are in:

D-200 Definitions for Certification Procedures and Test Procedures for Vapor Recovery Systems

For the purpose of this procedure, the term "ARB" refers to the State of California Air Resources Board, and the term "ARB Executive Officer" refers to the Executive Officer of the ARB or his or her authorized representative or designate.

1.1 This test procedure is used to quantify the vapor tightness of vapor recovery systems installed at gasoline dispensing facilities (GDF) equipped with pressure/vacuum (P/V) valves, provided that the designed pressure setting of the P/V valves is a minimum of 2.5 inches of water column (inches H_2O).

1.2 Systems equipped with a P/V valve(s) allowed to have a designed cracking pressure less than 2.5 inches H_2O shall be bagged to eliminate any flow contribution through the valve assembly from the test results. The valve/vent pipe connection, however, shall remain unobstructed during this test.

1.3 At facilities not required to be equipped with a P/V valve(s), the vent pipe(s) shall be capped. For those installations, the test may be conducted at the vent pipe(s).

2 PRINCIPLE AND SUMMARY OF TEST PROCEDURE

2.1 The entire vapor recovery system is pressurized with nitrogen to two (2.0) inches H_2O. The system pressure is then allowed to decay and the pressure after five (5) minutes is compared with an allowable value. The minimum allowable five-minute final pressure is based on the system ullage and pressure decay equations. For the purpose of compliance determination, this test shall be

conducted after all back-filling, paving, and installation of all Phase I and Phase II components, including P/V valves, has been completed.

2.2 For GDF equipped with a coaxial Phase I system, this test shall be conducted at a Phase II vapor riser. For GDF which utilize a two-point Phase I system, this test may be conducted at either a Phase II riser or a Phase I vapor coupler provided that the criteria set forth in Section 6.7 have been met. If the integrity criteria for two-point systems specified in Section 6.7 are met, it is recommended that this test be conducted at the Phase I vapor coupler.

3 RANGE

3.1 If mechanical pressure gauges are employed, the full-scale range of pressure gauges shall be 0-2.0, 0-1.0, and 0-0.50 inches H_2O column. Maximum incremental graduations of the pressure gauge shall be 0.05 inches H_2O and the minimum accuracy of the gauge shall be three percent of full scale. The minimum diameter of the pressure gauge face shall be 4 inches.

3.2 If an electronic pressure measuring device is used, the full-scale range of the device shall not exceed 0-10 inches H_2O with a minimum accuracy of 0.5 percent of full-scale. A 0-20 inches H_2O device may be used, provided the equivalent accuracy is not less than 0.25 percent of full-scale.

3.3 The minimum total ullage, for each individual tank, shall be 1,000 gallons or 25% of the tank capacity, whichever is less. The maximum total ullage, for all manifolded tanks, shall not exceed 25,000 gallons. These values are exclusive of all vapor piping volumes.

3.4 The minimum and maximum nitrogen feed-rates, into the system, shall be one (1) and five (5) CFM, respectively.

4 INTERFERENCES

4.1 Introduction of nitrogen into the system at flowrates exceeding five (5) CFM may bias the results of the test toward non-compliance. Only gaseous nitrogen shall be used to conduct this test. Air, liquefied nitrogen, helium, or any gas other than nitrogen shall not be used for this test procedure.

4.2 For vacuum-assist Phase II systems which utilize an incinerator, power to the collection unit and the processor shall be turned off during testing.

4.3 For vacuum-assist systems, with positive displacement vacuum pumps, which locate the vacuum producing device in-line between the Phase II vapor riser and the storage tank, the following requirements shall apply:

4.3.1 A valve shall be installed at the vacuum producing device. When closed, this valve shall isolate the vapor passage downstream of the vacuum producing device.

4.3.2 The storage tank side of the vacuum producing device shall be tested in accordance with the procedures outlined in Section 7 of this method. Compliance shall be determined by comparing the final five-minute pressure with the allowable minimum five-minute final pressure from the first column (1-6 affected nozzles) in Table IB or use the corresponding equation in Section 9.2.

4.3.3 The upstream vapor passage (nozzle to vacuum producing device) shall also be tested. Methodology for this test shall be submitted to the California Air Resources Board (CARB) for approval prior to submission of test results or shall be conducted in accordance with the procedures set forth in the applicable CARB Executive Order.

4.4 The results of this static pressure integrity test shall not be used to verify compliance if an Air to Liquid Volumetric Ratio Test (TP-201.5 or equivalent) was conducted within 24 hours prior to this test.

4.5 Thermal Bias for Electronic Manometers

Electronic manometers shall have a warm-up period of at least 15 minutes followed by a five minute drift check. If the drift exceeds 0.01 inches water column, the instrument should not be used.

5 APPARATUS

5.1 Nitrogen

Use commercial grade nitrogen in a high pressure cylinder, equipped with a two-stage pressure regulator and a one psig pressure relief valve.

5.2 Pressure Measuring Device

Use 0-2.0, 0-1.0, and 0-0.50 inches H_2O pressure gauges connected in parallel, a 0-2 inches H_2O manometer, or an electronic pressure measuring device to monitor the pressure decay in the vapor recovery system. The pressure measuring device shall, at a minimum, be readable to the nearest 0.05 inches H_2O.

5.3 “T” Connector Assembly

See Figure 1 for example.

5.4 Vapor Coupler Integrity Assembly

Assemble OPW 633-A, 633-B, and 634-A adapters, or equivalent, as shown in Figure 2. If the test is to be conducted at the storage tank Phase I vapor coupler, this assembly shall be used prior to conducting the static leak test in order to verify the pressure integrity of the vapor poppet. The internal volume of this assembly shall not exceed 0.1 cubic feet.

5.5 Vapor Coupler Test Assembly

Use a compatible OPW 634-B cap, or equivalent, equipped with a center probe to open the poppet, a pressure measuring device to monitor the pressure decay, and a connection for the introduction of nitrogen into the system. See Figure 3 for an example.

5.6 Stopwatch

Use a stopwatch accurate to within 0.2 seconds.

5.7 Flow Meter

Use a Dwyer flowmeter, Model RMC-104, or equivalent, to determine the required pressure setting of the delivery pressure gauge on the nitrogen supply pressure regulator. This pressure shall be set such that the nitrogen flowrate is between 1.0 and 5.0 CFM.

5.8 Combustible Gas Detector

A Bacharach Instrument Company, Model 0023-7356, or equivalent, may be used to verify the pressure integrity of system components during this test.

5.9 Leak Detection Solution

Any liquid solution designed to detect vapor leaks may be used to verify the pressure integrity of system components during this test.

6 PRE-TEST PROCEDURES

6.1 The following safety precautions shall be followed:

6.1.1 Only nitrogen shall be used to pressurize the system.

6.1.2 A one psig relief valve shall be installed to prevent the possible over-pressurizing of the storage tank.

6.1.3 A ground strap should be employed during the introduction of nitrogen into the system.

6.2 Failure to adhere to any or all of the following time and activity restrictions shall invalidate the test results:

6.2.1 There shall be no Phase I bulk product deliveries into or out of the storage tank(s) within the three (3) hours prior to the test or during performance of this test procedure.

6.2.2 There shall be no product dispensing within thirty (30) minutes prior to the test or during performance of this test procedure.

6.2.3 Upon commencement of the thirty minute “no dispensing” portion of this procedure, the headspace pressure in the tank shall be measured. If the pressure exceeds 0.50 inches H_2O, the pressure shall be carefully relieved in accordance with all applicable safety requirements. After the thirty minute “no dispensing” portion of this procedure, and prior to introduction of nitrogen, the headspace pressure shall again be lowered, if necessary, to less than 0.50 inches H_2O.

6.2.4 There shall be no Air to Liquid Volumetric Ratio Test (TP-201.5 or equivalent) conducted within the twenty-four (24) hour period immediately prior to this test.

6.2.5 The test shall be conducted with the station in normal operating mode. This includes all nozzles properly hung up in the dispenser boots and all dispenser cabinet covers in place. The exception to normal operating mode is that dispensing is disallowed as specified.

6.3 Measure the gallons of gasoline present in each underground storage tank and determine the actual capacity of each storage tank from facility records. Calculate the ullage space for each tank by subtracting the gasoline gallonage present from the actual tank capacity. The minimum ullage during the test, for all manifolded tanks, shall be 1,000 gallons or 25 percent of the tank capacity, whichever is less. The total ullage, for all manifolded tanks, shall not exceed 25,000 gallons.

6.4 For two-point Phase I systems, this test shall be conducted with the dust cap removed from both the product and the vapor coupler. This is necessary to determine the vapor tightness of the Phase I vapor poppet. See Section 6.7 if this test is to be conducted at the Phase I vapor coupler.

6.4.1 For coaxial Phase I systems, this test shall be conducted with the dust cap removed from the Phase I coupler. This is necessary to insure the vapor tightness of the Phase I vapor poppet.

6.4.2 Verify that the liquid level in the storage tank is at least four (4) inches above the highest opening at the bottom of the submerged drop tube.

6.5 If the Phase I containment box is equipped with a drain valve, this test shall be conducted with the drain valve installed and the manhole cover removed. If the drain valve is cover-actuated, the test shall be done once with the cover removed and repeated with the cover installed.

6.6 If the test is to conducted at a Phase II vapor riser, disconnect the dispenser end of one vapor recovery hose and install the “T” connector assembly (see Figure 1). Connect the nitrogen gas supply (do not use air) and the pressure measuring device to the “T” connector.

6.6.1 For those Phase II vapor systems utilizing a dispenser mounted remote vapor check valve, the “T” connector assembly shall be installed on the vapor riser side of the check valve.

6.7 If this test is to be conducted at the Phase I vapor coupler on a two-point Phase I system, the procedures set forth in subsections 6.7.1 and 6.7.2 shall be successfully completed prior to testing. The static pressure integrity test shall not be conducted at the Phase I coupler at facilities equipped with coaxial Phase I systems.

6.7.1 Connect the Vapor Coupler Integrity Assembly to the Phase I vapor coupler. Connect the Vapor Coupler Test Assembly. Connect the nitrogen supply to the assembly and carefully pressurize the internal volume of the assembly to two (2.0) inches H_2O. Start the stopwatch. Record the final pressure after one minute.

6.7.2 If the pressure after one minute is less than 0.25 inches H_2O, the leak rate through the Phase I vapor poppet precludes conducting the static leak test at this location. If the pressure after one minute is greater than or equal to 0.25 inches H_2O, the static leak test may be conducted at this location. This criteria assures a maximum leak rate through the Phase I vapor poppet of less than 0.0004 cubic feet per minute.

6.7.3 Disconnect the Vapor Coupler Integrity Assembly to the Phase I vapor coupler. If the requirements of subsection 6.7.2 were met, connect the Vapor Coupler Test Assembly to the Phase I vapor coupler.

6.7.4 Product may be poured onto the Phase I vapor coupler to check for leaks. This diagnostic procedure shall not be substituted for the procedures set forth in subsections 6.7.1 and 6.7.2.

6.8 All pressure measuring device(s) shall be bench calibrated using either a reference gauge or incline manometer. Calibration shall be performed at 20, 50, and 80 percent of full scale. Accuracy shall be within two percent at each of these calibration points. Calibrations shall be conducted on a frequency not to exceed 90 days.

6.9 Use the flowmeter to determine the nitrogen regulator delivery pressures which correspond to nitrogen flowrates of 1.0 and 5.0 CFM. These pressures define the allowable range of delivery pressures acceptable for this test procedure. Also record the regulator delivery pressure setting, and the corresponding nitrogen flowrate that will be used during the test. As an alternative, the flowmeter may be connected, in-line between the nitrogen supply regulator and Vapor Coupler Test Assembly, during the test.

6.10 Use Equation 9.3 to calculate the approximate time required to pressurize the system ullage to the initial starting pressure of two (2.0) inches H_2O. This will allow the tester to minimize the quantity of nitrogen introduced into those systems which cannot comply with the static leak standards.

6.11 Attach the Vapor Coupler Test assembly to the Phase I poppet or the "T" connector assembly to the Phase II vapor riser. Read the initial pressure of the storage tank and underground piping. If the initial pressure is greater than 0.5 inches H_2O, carefully bleed off the pressure, in accordance with all applicable safety procedures, in the storage tank and underground piping to less than 0.5 inches H_2O column.

6.12 Any electronic manometers shall be subject to warm-up and drift check before use; see Section 4.5.

7 TESTING

7.1 Open the nitrogen gas supply valve and set the regulator delivery pressure within the allowable range determined in Section 6.9, and start the stopwatch. Pressurize the vapor system (or subsystem for individual vapor return line systems) to **at least 2.2 inches H_2O** initial pressure. It is critical to maintain the nitrogen flow until the pressure stabilizes, indicating temperature and vapor pressure stabilization in the tanks. Check the test equipment using leak detecting solution or a combustible gas detector to verify that all test equipment is leak tight. Note: if a combustible gas detector is used to search for leaks, components which were certified with an allowable leak rate, such as 0.38 CFH at a pressure of two (2) inches, cannot be determined to be faulty solely on the basis of the concentration registered on the instrument.

7.1.1 If the time required to achieve the initial pressure of two (2.0) inches H_2O exceeds twice the time derived from Equation 9.3, stop the test and use liquid

leak detector, or a combustible gas detector, to find leak(s) in the system. Failure to achieve the initial starting pressure within twice the time derived from Equation 9.3 demonstrates the inability of the system to meet the performance criteria. Repair or replace the faulty component(s) and restart the test pursuant to Section 7.1.

7.2 Close and disconnect the nitrogen supply. Start the stopwatch when the pressure has decreased to the initial starting pressure of two (2.0) inches H_2O.

7.3 At one-minute intervals during the test, record the system pressure. After five minutes, record the final system pressure. See the applicable of Tables 1A (or Equation 9.1) or 1B (or equation 9.2) to determine the acceptability of the final system static pressure results. For intermediate values of ullage in Tables 1A and 1B, linear interpolation may be employed.

7.4 If the system failed to meet the criteria set forth in Table 1A or 1B (or the appropriate equation in Section 9), repressurize the system and check all accessible vapor connections using leak detector solution or a combustible gas detector. If vapor leaks in the system are encountered, repair or replace the defective component and repeat the test. Potential sources of leaks include nozzle check valves, nozzle vapor paths, pressure/vacuum relief valves, containment box drain valve assemblies, and plumbing connections at the risers.

7.4.1 If the facility fails to comply with the static leak test standards and the two point Phase I system utilizes overfill prevention devices in the drop tubes which were installed before July 1, 1993, and which are unable to pass the test with the dust caps removed from the product and vapor couplers (see Sec. 6.4), the test may be conducted with the caps on the couplers, as an exception.

This exception is not intended to allow bleed holes in drop tubes.

This exception expires on January 1, 2002, after which date all testing shall be conducted with the fill and vapor caps removed from two point systems. Under no circumstances may the test be conducted with the caps on coaxial Phase I couplers.

7.5 After the remaining system pressure has been relieved, remove the “T” connector assembly and reconnect the vapor recovery hose, if applicable.

7.6 If the vapor recovery system utilizes individual vapor return lines, repeat the leak test for each gasoline grade. Avoid leaving any vapor return line open longer than is necessary to install or remove the “T” connector assembly.

7.7 If the applicable CARB Executive Order requires the test to be conducted with and without the containment box cover in place, repeat the test with the cover in

place. In these cases clearly specify, on Form 1, which results represent the pressure integrity with and without the cover in place.

8 POST-TEST PROCEDURES

8.1 Use the applicable of Table 1A or 1B, or the applicable of Equations 9.1 or 9.2, to determine the compliance status of the facility by comparing the final five-minute pressure with the minimum allowable final pressure.

8.1.1 For balance Phase II systems use Table 1A or the applicable of Equation 9.1 to determine compliance.

8.1.2 For vacuum-assist Phase II systems use Table 1B or the applicable of Equation 9.2 to determine compliance.

9 CALCULATIONS

9.1 For Phase II Balance Systems, the minimum allowable five-minute final pressure, with an initial pressure of two (2.0) inches H_2O, shall be calculated as follows:

$$P_f = 2e^{\left(\frac{-760.490}{V}\right)} \quad \text{if } N = 1-6 \qquad \text{[Equation 9-1]}$$

$$P_f = 2e^{\left(\frac{-792.196}{V}\right)} \quad \text{if } N = 7-12$$

$$P_f = 2e^{\left(\frac{-824.023}{V}\right)} \quad \text{if } N = 13-18$$

$$P_f = 2e^{\left(\frac{-855.974}{V}\right)} \quad \text{if } N = 19-24$$

$$P_f = 2e^{\left(\frac{-888.047}{V}\right)} \quad \text{if } N > 24$$

where:

N = The number of affected nozzles. For manifolded systems, N equals the total number of nozzles. For dedicated plumbing configurations, N equals the number of nozzles serviced by the tank being tested.

P_f = The minimum allowable five-minute pressure, inches H_2O

V = The total ullage affected by the test, gallons

e = A dimensionless constant approximately equal to 2.718

2 = The initial starting pressure, inches H_2O

9.2 For Phase II Vacuum Assist Systems, the minimum allowable five-minute final pressure, with an initial pressure of two (2.0) inches H_2O, shall be calculated as follows:

$$P_f = 2e^{\left(\frac{-500.887}{V}\right)} \quad \text{if } N = 1\text{-}6 \qquad \text{[Equation 9-2]}$$

$$P_f = 2e^{\left(\frac{-531.614}{V}\right)} \quad \text{if } N = 7\text{-}12$$

$$P_f = 2e^{\left(\frac{-562.455}{V}\right)} \quad \text{if } N = 13\text{-}18$$

$$P_f = 2e^{\left(\frac{-593.412}{V}\right)} \quad \text{if } N = 19\text{-}24$$

$$P_f = 2e^{\left(\frac{-624.483}{V}\right)} \quad \text{if } N > 24$$

where:

N = The number of affected nozzles. For manifolded systems, N equals the number of nozzles. For dedicated plumbing configurations, N equals the number of nozzles serviced by the tank being tested.

P_f = The minimum allowable five-minute final pressure, inches H_2O

V = The total ullage affected by the test, gallons

e = A dimensionless constant approximately equal to 2.718

2 = The initial starting pressure, inches H_2O

9.3 The minimum time required to pressurize the system ullage from zero (0) to two (2.0) inches H_2O gauge pressure shall be calculated as follows:

$$t_2 = \frac{V}{(1980)F} \qquad \text{[Equation 9-3]}$$

where:

t_2 = The minimum time to pressurize the ullage to two inches H_2O, minutes

V = The total ullage affected by the test, gallons

F = The nitrogen flowrate into the system, CFM

1980 = The conversion factor for pressure and gallons

9.4 If the policy of the local District requires an allowable tolerance for testing error, the minimum allowable five-minute final pressure, including testing error, shall be calculated as follows:

$$P_{f\text{-}E} = 2 - \left[1 + \left(\frac{E}{100}\right)\right]\left[408.9 - \left(P_f + 406.9\right)\right] \qquad \text{[Equation 9-4]}$$

where:

$P_{f\text{-}E}$ = The minimum allowable five-minute final pressure including allowable testing error, inches H_2O

E = The allowable testing error, percent

P_f = The minimum allowable five-minute final pressure calculated in Equations 9-1 or 9-2, inches H_2O

2 = The initial starting pressure, inches H_2O

408.9 = Atmospheric pressure plus the initial starting pressure, inches H_2O

406.9 = Atmospheric pressure, inches H_2O

10 REPORTING

10.1 The calculated ullage and system pressures for each five-minute vapor recovery system test shall be reported as shown in Form 1. Be sure to include the Phase I system type (two-point or coaxial), the Phase II system type, whether the system is manifolded, and the one-minute pressures during the test.

TABLE 1A

PHASE II **BALANCE** SYSTEMS

PRESSURE DECAY CRITERIA

INITIAL PRESSURE OF 2 INCHES WATER COLUMN (WC)

MINIMUM PRESSURE AFTER 5 MINUTES, INCHES WC

ULLAGE, GALLONS	NUMBER OF AFFECTED NOZZLES 01-06	07-12	13-18	19-24	>24
500	**0.44**	**0.41**	**0.38**	**0.36**	**0.34**
550	0.50	0.47	0.45	0.42	0.40
600	**0.56**	**0.53**	**0.51**	**0.48**	**0.46**
650	0.62	0.59	0.56	0.54	0.51
700	**0.67**	**0.64**	**0.62**	**0.59**	**0.56**
750	0.73	0.70	0.67	0.64	0.61
800	**0.77**	**0.74**	**0.71**	**0.69**	**0.66**
850	0.82	0.79	0.76	0.73	0.70
900	**0.86**	**0.83**	**0.80**	**0.77**	**0.75**
950	0.90	0.87	0.84	0.81	0.79
1,000	**0.93**	**0.91**	**0.88**	**0.85**	**0.82**
1,200	1.06	1.03	1.01	0.98	0.95
1,400	**1.16**	**1.14**	**1.11**	**1.09**	**1.06**
1,600	1.24	1.22	1.19	1.17	1.15
1,800	**1.31**	**1.29**	**1.27**	**1.24**	**1.22**
2,000	1.37	1.35	1.32	1.30	1.28
2,200	**1.42**	**1.40**	**1.38**	**1.36**	**1.34**
2,400	1.46	1.44	1.42	1.40	1.38
2,600	**1.49**	**1.47**	**1.46**	**1.44**	**1.42**
2,800	1.52	1.51	1.49	1.47	1.46
3,000	**1.55**	**1.54**	**1.52**	**1.50**	**1.49**
3,500	1.61	1.59	1.58	1.57	1.55
4,000	**1.65**	**1.64**	**1.63**	**1.61**	**1.60**
4,500	1.69	1.68	1.67	1.65	1.64
5,000	**1.72**	**1.71**	**1.70**	**1.69**	**1.67**
6,000	1.76	1.75	1.74	1.73	1.72
7,000	**1.79**	**1.79**	**1.78**	**1.77**	**1.76**
8,000	1.82	1.81	1.80	1.80	1.79
9,000	**1.84**	**1.83**	**1.83**	**1.82**	**1.81**
10,000	1.85	1.85	1.84	1.84	1.83
15,000	**1.90**	**1.90**	**1.89**	**1.89**	**1.89**
20,000	1.93	1.91	1.92	1.92	1.91
25,000	**1.94**	**1.94**	**1.94**	**1.93**	**1.93**

Note: For manifolded Phase II Balance Systems, the **"Number of Affected Nozzles"** shall be the total of all gasoline nozzles. For dedicated return configurations, the **"Number of Affected Nozzles"** shall be the total of those nozzles served by the tank being tested.

TABLE 1B

PHASE II **ASSIST** SYSTEMS

PRESSURE DECAY CRITERIA

INITIAL PRESSURE OF 2 INCHES WATER COLUMN (WC)

MINIMUM PRESSURE AFTER 5 MINUTES, INCHES WC

ULLAGE, GALLONS	NUMBER OF AFFECTED NOZZLES 01-06	07-12	13-18	19-24	>24
500	**0.73**	**0.69**	**0.65**	**0.61**	**0.57**
550	0.80	0.76	0.72	0.68	0.64
600	**0.87**	**0.82**	**0.78**	**0.74**	**0.71**
650	0.93	0.88	0.84	0.80	0.77
700	**0.98**	**0.94**	**0.90**	**0.86**	**0.82**
750	1.03	0.98	0.94	0.91	0.87
800	**1.07**	**1.03**	**0.99**	**0.95**	**0.92**
850	1.11	1.07	1.03	1.00	0.96
900	**1.15**	**1.11**	**1.07**	**1.03**	**1.00**
950	1.18	1.14	1.11	1.07	1.04
1,000	**1.21**	**1.18**	**1.14**	**1.10**	**1.07**
1,200	1.32	1.28	1.25	1.22	1.19
1,400	**1.40**	**1.37**	**1.34**	**1.31**	**1.28**
1,600	1.46	1.43	1.41	1.38	1.35
1,800	**1.51**	**1.49**	**1.46**	**1.44**	**1.41**
2,000	1.56	1.53	1.51	1.49	1.46
2,200	**1.59**	**1.57**	**1.55**	**1.53**	**1.51**
2,400	1.62	1.60	1.58	1.56	1.54
2,600	**1.65**	**1.63**	**1.61**	**1.59**	**1.57**
2,800	1.67	1.65	1.64	1.62	1.60
3,000	**1.69**	**1.68**	**1.66**	**1.64**	**1.62**
3,500	1.73	1.72	1.70	1.69	1.67
4,000	**1.76**	**1.75**	**1.74**	**1.72**	**1.71**
4,500	1.79	1.78	1.77	1.75	1.74
5,000	**1.81**	**1.80**	**1.79**	**1.78**	**1.77**
6,000	1.84	1.83	1.82	1.81	1.80
7,000	**1.86**	**1.85**	**1.85**	**1.84**	**1.83**
8,000	1.88	1.87	1.86	1.86	1.85
9,000	**1.89**	**1.89**	**1.88**	**1.87**	**1.87**
10,000	1.90	1.90	1.89	1.88	1.88
15,000	**1.93**	**1.93**	**1.93**	**1.92**	**1.92**
20,000	1.95	1.95	1.94	1.94	1.94
25,000	**1.96**	**1.96**	**1.96**	**1.95**	**1.95**

Note: For manifolded Phase II Assist Systems, the **"Number of Affected Nozzles"** shall be the total of all gasoline nozzles. For dedicated return configurations, the **"Number of Affected Nozzles"** shall be t he total of those nozzles served by the tank being tested.

FORM 1

SUMMARY OF SOURCE TEST DATA

SOURCE INFORMATION		FACILITY PARAMETERS
GDF Name and address _____ _____ _____	GDF Representative and Title GDF Phone No. ( )	PHASE II SYSTEM TYPE (Check One) Balance Hirt ___ Red Jacket Hasstech Healy Other
Permit Conditions	Source: GDF Vapor Recovery System GDF # _____ A/C # _____	Manifolded? Y or N

Operating Parameters

Number of Nozzles Served by Tank #1 — Number of Nozzles Served by Tank #3

Number of Nozzles Served by Tank #2 — Number of Nozzles Served by Tank #4

Applicable Regulations:	VN Recommended

Source Test Results and Comments

Tank #:	1	2	3	4
1. Product Grade				
2. Actual Tank Capacity, gallons				
3. Gasoline Volume				
4. Ullage, gallons (#2-#3)				
5. Initial Pressure, inches H_2O				
6. Pressure After 1 Minute, inches H_2O				
7. Pressure After 2 Minutes, inches H_2O				
8. Pressure After 3 Minutes, inches H_2O				
9. Pressure After 4 Minutes, inches H_2O				
10. Final Pressure After 5 Minutes, inches H_2O				
11. Allowable Final Pressure				

Test Conducted by:	Test Company:	Date of Test:

Figure 1

"T" Connector Assembly

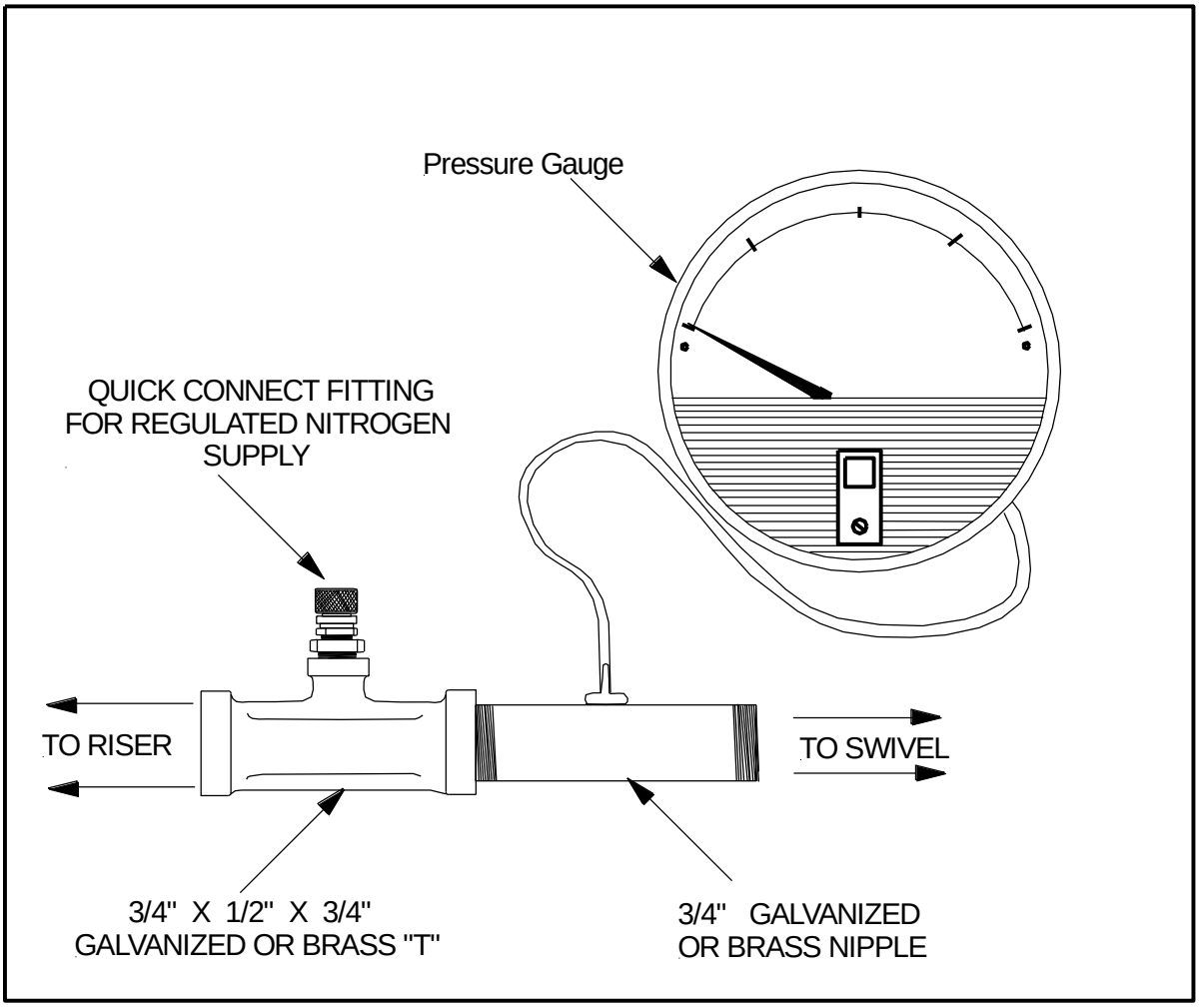

Figure 2

Vapor Coupler Integrity Assembly

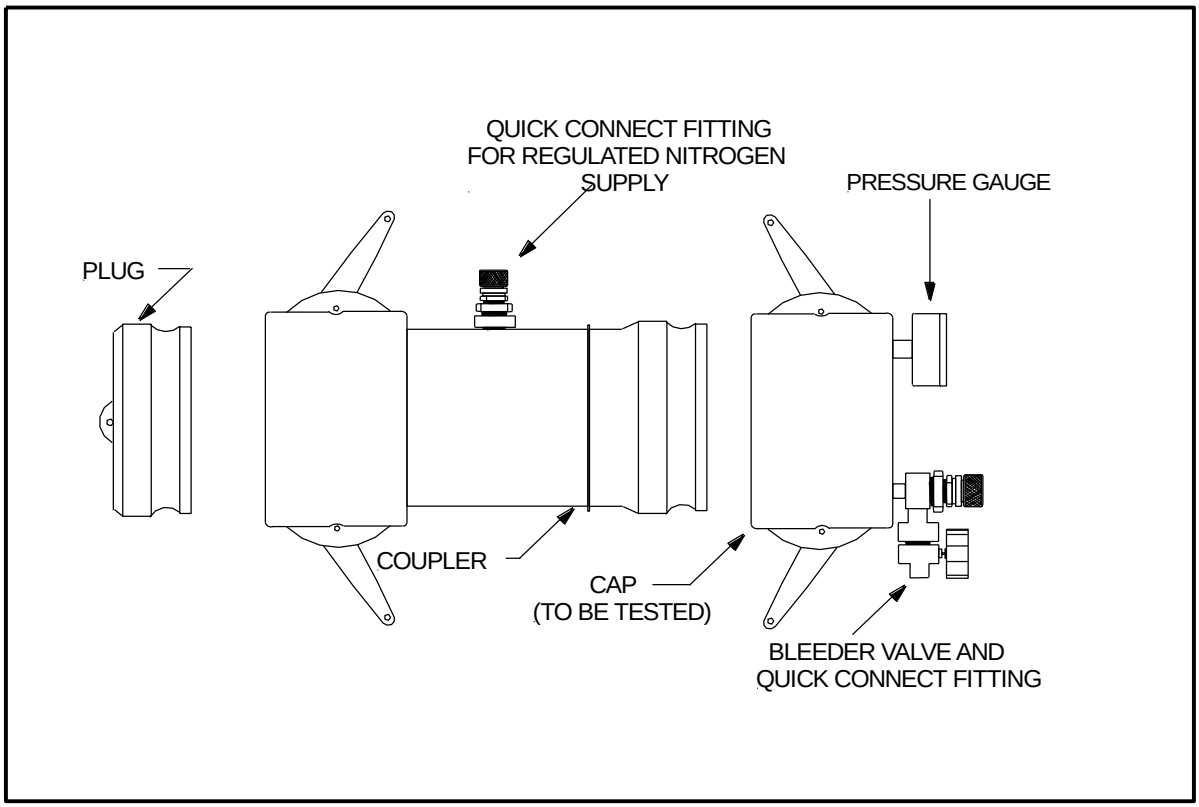

Figure 3

Vapor Coupler Test Assembly

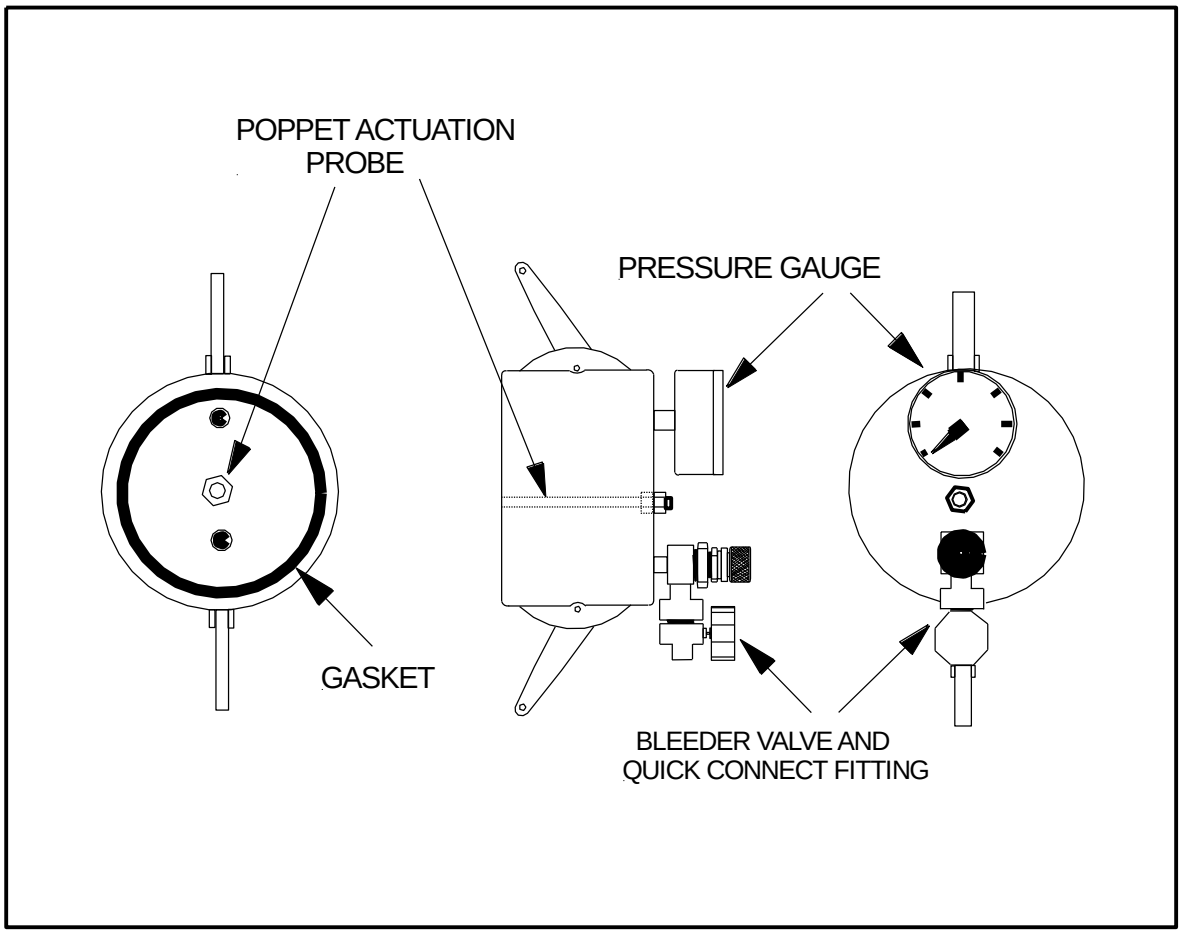

ATTACHMENT 4

California Air Resources Board
Vapor Recovery Test Procedure TP–201.1,
Volumetric Efficiency of Phase I Vapor Recovery Systems,
adopted October 8, 2003.

California Environmental Protection Agency

Air Resources Board

Vapor Recovery Test Procedure

TP-201.1

Volumetric Efficiency for Phase I Vapor Recovery Systems

Adopted: April 12, 1996
Amended: February 1, 2001
Amended: October 8, 2003

California Environmental Protection Agency
Air Resources Board

Vapor Recovery Test Procedure

TP-201.1

Volumetric Efficiency of Phase I Vapor Recovery Systems

Definitions common to all certification and test procedures are in:

D-200 Definitions for Vapor Recovery Procedures

For the purpose of this procedure, the term "CARB" refers to the State of California Air Resources Board, and the term "Executive Officer" refers to the CARB Executive Officer, or his or her authorized representative or designate.

1. PURPOSE AND APPLICABILITY

The purpose of this procedure is to quantify the transfer efficiency when a bulk gasoline delivery between a cargo tank and underground storage tank is made. This procedure is used to determine compliance with Phase I performance standard specified in Certification Procedure 201 (CP-201).

2. PRINCIPLE AND SUMMARY OF TEST PROCEDURE

During a gasoline delivery, the cargo tank and gasoline dispensing facility (GDF) are instrumented with test equipment in order to determine the amount of vapor returned to the cargo tank and the amount of vapor discharged through the GDF vent pipe. From these parameters the Phase I volumetric efficiency is determined. This procedure provides for determining efficiency by way of either direct measurement or calculation.

If a Phase I system fails to meet the volumetric efficiency as required by CP-201, the cargo tank shall be tested for compliance with the daily standards established for cargo tanks as specified in CP-204 to determine if the failure can be attributed to the cargo tank.

3. BIASES AND INTERFERENCES

3.1 Any vapor leaks exceeding 100% of the Lower Explosive Limit (LEL) during the gasoline bulk delivery precludes the use of this method.

3.2 Gasoline cargo tanks exceeding the allowable daily pressure-decay standards as defined in CP-204 preclude the use of this method.

3.3 The presence of vapor leaks in the GDF, greater than the allowable leak decay limits specified in Section 3.2 of CP-201 preclude use of this method.

3.4 Unusually large cargo tank headspace volumes may cause low volumetric efficiency under certain conditions. Conversely, unusually small cargo tank headspace volumes may result in unusually high efficiency. During the Certification Process for a Phase I system, the cargo tank headspace volumes should be between 3.0 and 10.0 percent of the total cargo tank capacity prior to the delivery.

4. SENSITIVITY, PRECISION AND RANGE

4.1 Mechanical Pressure Gauge. The minimum readability shall be 1.00 inches H_2O with a maximum full-scale range of 30 inches H_2O and minimum accuracy of three percent of full scale. Pressure gauges with a higher resolution and higher accuracy may be deemed acceptable with prior approval by the Executive Officer.

4.2 Electronic Pressure Gauge. The maximum full-scale range of the device shall not exceed 20 inches H_2O with minimum sensitivity of 1.00 inches H_2O and minimum accuracy of 0.5 percent of full scale. Electronic pressure gauges shall be calibrated as described in Section 5 of this procedure.

4.3 Volume Meter, Vapor Return. Minimum full-scale range shall be 5,000 CFH with a maximum rated back pressure less than 1.10 in H_2O. The meter shall have an internal diameter of 3 inches, equal to that of a cargo tank vapor return hose.

4.4 Volume Meter, Vent Pipe. Minimum full-scale range shall be 800 CFH with a maximum rated back pressure less than 0.26 in H_2O. The meter shall have an internal diameter of 2 inches, equal to that of a GDF vent pipe.

4.5 Temperature. Maximum range of 0 to 150°F and accurate to within 2°F.

4.6 Barometric Pressure. Minimum accuracy of .08 inches of mercury (1.0 inch H_2O or 2.7 millibar).

5. EQUIPMENT

5.1 Vapor Return Meter(s). Use a volume meter with minimum specifications described in Section 4 to measure the amount of vapor returned to the cargo tank from the underground storage tank. The meter shall be equipped with a pressure gauge and temperature device as described in Section 4 on the inlet side. The meter shall be connected to the GDF in a fashion as to maintain intrinsic safety, see Figure 3.

5.2 Vent Pipe Meter. Use a volume meter with minimum specifications described in Section 4 to measure the amount of vapor discharged through the vent pipe(s). The meter shall be equipped with a pressure gauge and temperature device as described in Section 4 on the inlet side. The meter shall be connected to the GDF in a fashion as to maintain intrinsic safety, see Figure 3.

5.3 Cargo Tank Back Pressure Assembly. When testing Phase I efficiency without the use of volume meters, use OPW® 633-F and 633-D couplers, or equivalent, as shown in Figure 1. The assembly shall be equipped with a pressure gauge capable of measuring up to 30 inches H_2O back pressure at the gasoline cargo tank vapor

coupler. Temperature may be measured at this point as an alternate to, or in addition to 5.1.

5.4 Storage Tank Pressure Assembly. When testing Phase I efficiency with the cargo tank back pressure assembly and the test facility uses a two point Phase I system with storage tanks manifolded underground, use OPW® 634-B cap(s) or equivalent, equipped with a pressure gauge and center probe as shown in Figure 2

5.5 Combustible Gas Detector. Use a Bacharach Instrument Company Model 0023-7356®, or equivalent, to quantify any vapor leaks occurring during the gasoline bulk drop.

5.6 Barometer. Use a mercury, aneroid, or equivalent barometer with minimum specifications described in Section 4 to measure the barometric pressure during testing. The result shall be used to correct the volume of vapor returned or discharged.

5.7 Temperature. Use a minimum of three thermometers, Thermocouples™, or equivalent, to measure the vapor temperature at each meter. The results shall be used to correct the volume of vapor returned or discharged.

5.8 Stopwatch. Use a stopwatch accurate to within 0.1 seconds to time the delivery rate.

6. PRE-TEST PROCEDURES

6.1 The volume meter(s) shall be proofed against a standard reference meter prior to its initial use in the field or at intervals not to exceed 180 days. Calibration shall be performed at a minimum of three flowrates representing 25, 50 and 75 percent of rated capacity. An official statement of proofing is required.

6.2 The GDF shall be pre-tested for leak integrity as described in TP-201.3 at least 24 hours prior, and no longer than 7-days before testing. If a manifold is to be used at the vent pipe, the manifold shall be installed prior to conducting leak integrity testing.

6.3 No product dispensing shall occur for a minimum of 30 minutes prior to testing.

6.4 Taking caution to avoid venting the storage tanks, connect the vent pipe meter(s) to the appropriate storage tank vent pipe(s) with the inlet side attached to the vent pipe. Use a metal ball valve if required to avoid venting. Attach the PV valve(s) to the outlet side of the meter(s) using a threaded nipple or equivalent. A temporary manifold may be constructed of steel where all vent pipes are connected to a single outlet and a single meter is installed.

6.5 Taking caution to avoid venting the storage tanks, connect the vapor return meter(s) to the appropriate Phase I vapor connection(s) using metal fittings in order to maintain intrinsic safety. Use a metal vapor poppet if required to avoid venting. Connect the cargo tank vapor return hose to the outlet side of the meter. The meter will be in line between the Phase I connection and the cargo tank vapor return hose.

6.6 With no product dispensing, record the product grade, tank capacity, tank temperature and ambient conditions on the data sheet where provided.

6.7 If used, connect the Cargo Tank Back Pressure Assembly to the vapor coupler on the cargo tank. This assembly will be in line with the cargo tank vapor recovery hose. If the cargo tank vapor coupler is equipped with a poppet, use a pressure assembly with center probe.

6.8 If the cargo tank back pressure assembly is being used, install a Storage Tank Pressure Assembly on each Phase I vapor connection of those tanks not receiving product. During each bulk drop, record the maximum pressure in those tanks.

6.9 Record the product quantities to be delivered during each bulk drop. Also record the cargo tank CARB decal number and delivery company name on the data sheet where provided.

6.10 Stabilization. Open the corresponding cargo tank internal vapor valve(s) prior to delivering product. Once the vapor valve(s) is opened, wait a period of at least 1-minute to allow for pressure stabilization between the UST and cargo tank.

7. TESTING

7.1 Record the stabilized, vapor return and vent pipe meter reading(s) on the data sheet where provided.

7.2 Start the gasoline bulk drop. Using the stopwatch, time each gasoline drop to determine the delivery rate for each compartment.

7.3 At minimum, record the following parameters for each gasoline bulk drop:

7.3.1 Initial and final meter readings for each vapor return meter

7.3.2 Average vapor return pressure

7.3.3 Average vapor return temperature

7.4 Repeat Sections 7.1 through 7.3 for each gasoline delivery. For deliveries using different Phase I connections (i.e., different storage tanks), relocate the vapor return meter(s) to the appropriate storage as specified in Section 6.7.

7.5 At conclusion of all gasoline deliveries, ensure that each of the cargo tank internal vapor valve is closed prior to disconnecting. Disconnect the vapor return meter(s) from the storage tank(s) taking care to avoid venting pressure. Disconnect the vapor return hose from the outlet side of the vapor return meter.

7.6 Continue to monitor the vent pipe meter for a minimum of 15 minutes. If the UST pressure is less than 1.00 inches H_2O, testing may be concluded. In the event that the station UST pressure is greater than 1.00 inches H_2O, continue to monitor the vent

pipe meter for an additional 45 minutes (1-hour total). These measurements are to be included in the Phase I efficiency calculation.

8. POST TEST PROCEDURES

8.1 At conclusion of the bulk delivery, ensure that each of the cargo tank internal vapor valves is closed prior to removing connections.

8.2 Remove the Cargo Tank Back Pressure Assembly, if used, from the cargo tank vapor return coupler.

8.3 Remove the Storage Tank Pressure Assembly, if used, from each storage tank where installed.

8.4 Remove the temporary manifold (if constructed) and disconnect all instrumentation from the vent pipe area. Replace the PV valve(s) on the vent pipe(s).

8.5 Verify the quantity of gasoline delivered to each storage tank using the facility tank gauge monitor or with use of a tank gauging stick.

9. CALCULATING RESULTS

9.1 The measured volume of vapor passed through the vapor return to the cargo tank and vent pipe shall be corrected to standard conditions as follows:

$$V_{corr} = \frac{(V_{vi})(528)[P_b + \Delta h/13.6]}{(T_{vi})(29.92)}$$ **Equation 9.1**

Where:

V_{corr} = Volume of vapor, corrected to 68^0F (528^0R) and 29.92" Hg
P_b = Barometric Pressure, inches Hg
V_{vi} = Uncorrected volume of vapor (raw meter reading)
T_{vi} = Average or venting temperature at vent meter, ^{0}R
Δh = Average or venting pressure at vent meter, inches H_2O
13.6 = Inches of water per inch of mercury
528 = Standard ambient temperature, 68^0F converted to degrees Rankine

9.2 If a cargo tank back pressure assembly was used to conduct testing, the volume of vapor returned to the cargo tank shall be calculated to standard conditions as follows:

$$V_t = \left[\frac{(0.1337)(G_t)\left(528\left(P_b + \frac{\Delta h}{13.6}\right)\right)}{(T_t)(29.92)} \right]$$ **Equation 9.2**

Where:

V_t	=	Calculated volume of vapor returned to cargo tank corrected to 68^0F (528^0R) and 29.92" Hg
G_t	=	Volume of gasoline delivered, gallons
Δh	=	Final gauge pressure at cargo tank, in. H_2O
T_t	=	Average temperature of vapor returned to cargo tank, ^oR
P_b	=	Barometric pressure, inches Hg
13.6	=	Inches of water per inch of mercury
528	=	Standard ambient temperature, 68^oF converted to degrees Rankine

9.3 The collection efficiency shall be calculated as follows:

$$E = (100)\left[\frac{V_{returned} - V_{vent}}{V_{returned}}\right] \qquad \textbf{Equation 9.3}$$

Where:

E	=	Phase I Volumetric Efficiency, percent
$V_{returned}$	=	Vapor Return: From 9.1(V_{corr}) or 9.2(V_t)
V_{vent}	=	Corrected Vent Pipe Discharge: From 9.1(V_{corr})

10. REPORTING RESULTS

10.1 Results shall be reported as shown on the data sheets where provided. Districts may require the use of alternate data sheets provided they include, at minimum, the same parameters identified on Form 1.

11. ALTERNATE PROCEDURES

11.1 This procedure shall be conducted as specified. Modifications to this test procedure shall not be used to determine compliance unless prior written approval has been obtained from the ARB Executive Officer, pursuant to Section 14 of Certification Procedure CP-201.

FORM 1
ARB TP-201.1

Test Date: _____ Observations By: _____

Facility Name: _____

Address: _____

System Description: _____

Time: _____ Ambient Temp: _____ deg F Barometric: _____ Hpa

Wind: _____ mph Altitude: _____ ft Other: _____

Cargo Tank Company: _____

Cargo Tank Decal #(s): Truck: _____ Trailer: _____

Compartment #1

Pre-Delivery Observations		Delivery Observations	
_____	_____	Tank Orientation:	_____
Initial UST Product Temerature:	_____ deg F	Delivered Product Temperature:	_____ deg F
UST Size:	_____ gal	Avg Vapor Return Pressure:	_____ inWC
Amount To Deliver (BOL):	_____ gal	Avg Vapor Return Temp:	_____ deg F
Grade: _____	Loading Temp (BOL): _____	Fuel RVP (BOL):	_____
Initial Meter Reading:	_____ ft^3	**Final Meter Reading:**	_____ ft^3

Compartment #2

Pre-Delivery Observations		Delivery Observations	
_____	_____	Tank Orientation:	_____
Initial UST Product Temerature:	_____ deg F	Delivered Product Temperature:	_____ deg F
UST Size:	_____ gal	Avg Vapor Return Pressure:	_____ inWC
Amount To Deliver (BOL):	_____ gal	Avg Vapor Return Temp:	_____ deg F
Grade: _____	Loading Temp (BOL): _____	Fuel RVP (BOL):	_____
Initial Meter Reading:	_____ ft^3	**Final Meter Reading:**	_____ ft^3

Compartment #3

Pre-Delivery Observations		Delivery Observations	
_____	_____	Tank Orientation:	_____
Initial UST Product Temerature:	_____ deg F	Delivered Product Temperature:	_____ deg F
UST Size:	_____ gal	Avg Vapor Return Pressure:	_____ inWC

Compartment #4

Pre-Delivery Observations		Delivery Observations	
		Tank Orientation:	
Initial UST Product Temerature:	deg F	Delivered Product Temperature:	deg F
UST Size:	gal	Avg Vapor Return Pressure:	inWC
Amount To Deliver (BOL):	gal	Avg Vapor Return Temp:	deg F
Grade:	Loading Temp (BOL):	Fuel RVP (BOL):	
Initial Meter Reading:	ft^3	**Final Meter Reading:**	ft^3

Compartment #5

Pre-Delivery Observations		Delivery Observations	
		Tank Orientation:	
Initial UST Product Temerature:	deg F	Delivered Product Temperature:	deg F
UST Size:	gal	Avg Vapor Return Pressure:	inWC
Amount To Deliver (BOL):	gal	Avg Vapor Return Temp:	deg F
Grade:	Loading Temp (BOL):	Fuel RVP (BOL):	
Initial Meter Reading:	ft^3	**Final Meter Reading:**	ft^3

Vent Pipe Discharge

Delivery Observations		Post Delivery Observations	
Initial Vent Pressure:	inWC	Post Observation Time:	
Initial Vent Temperature:	deg F		
Initial Meter Reading:	ft^3	Remarks:	
		Final Vent Pressure:	inWC
Stack Venting Pressure:	inWC	Final Vent Temperature:	deg F
Stack Venting Temperature:	deg F	**Final Meter Reading:**	ft^3

Figure 1 - Cargo Tank Back Pressure Assembly

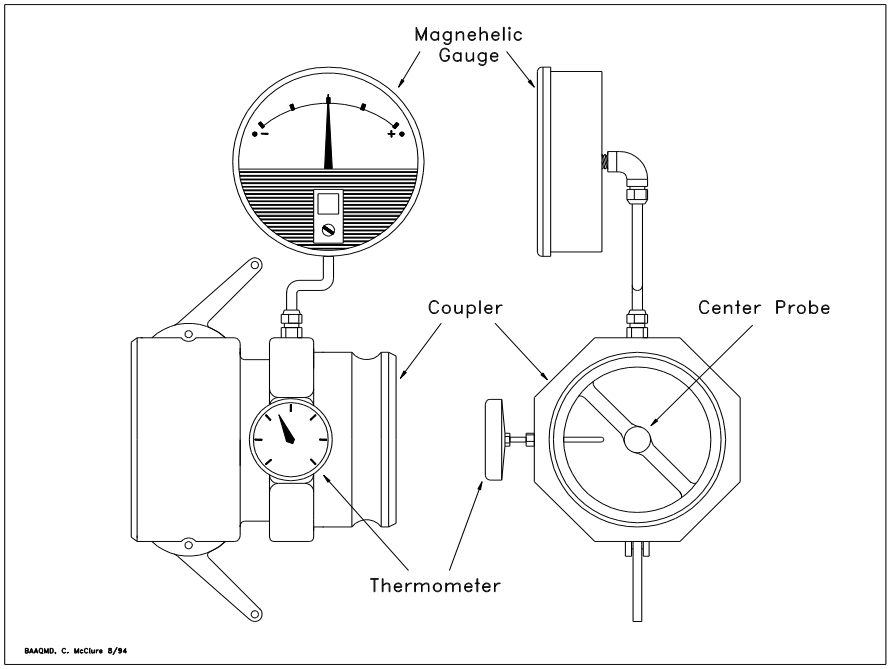

Figure 2 - Storage Tank Pressure Assembly

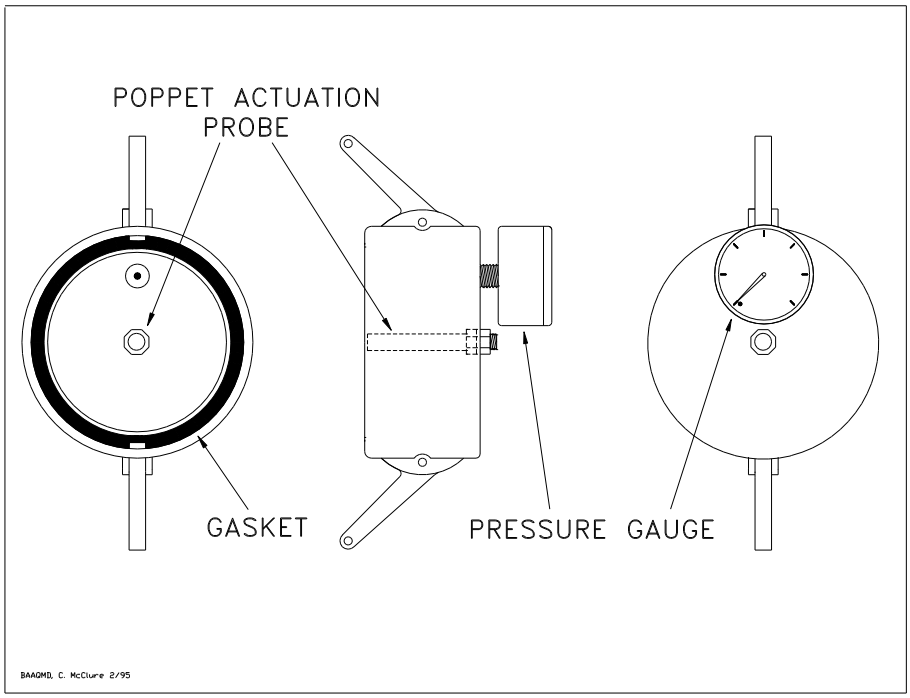

Figure 3 - Vent Pipe and Vapor Return Meter Arrangement

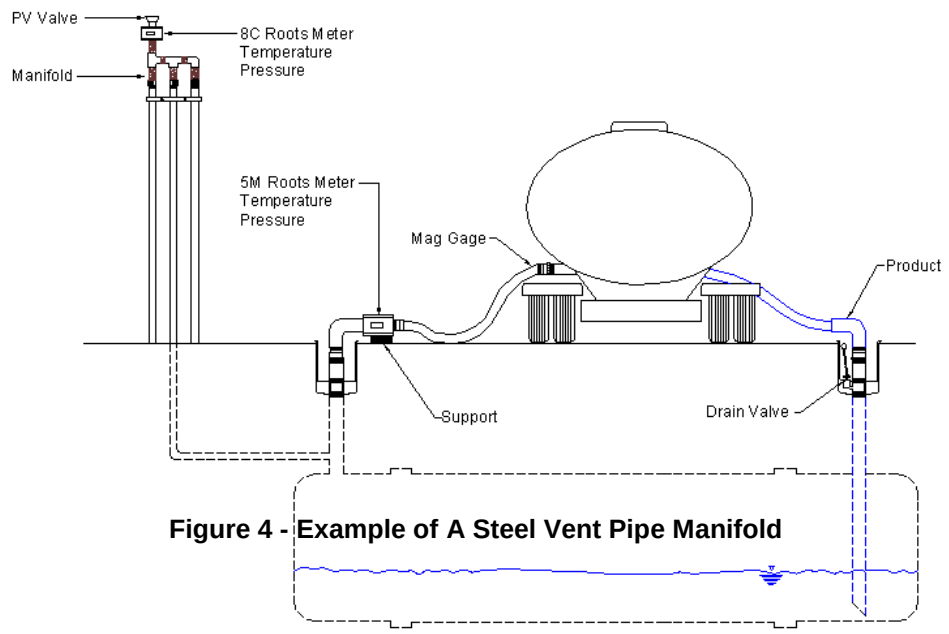

Figure 4 - Example of A Steel Vent Pipe Manifold

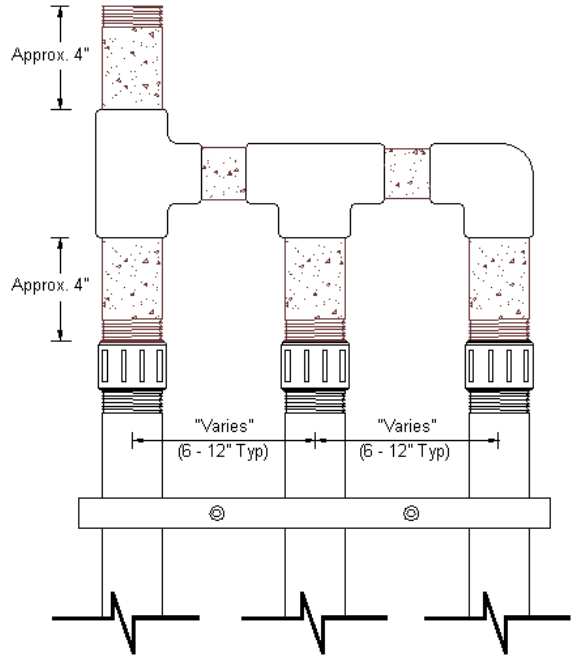

ATTACHMENT 5

California Air Resources Board
Vapor Recovery Definitions D-200,
Definitions for Vapor Recovery Procedures,
adopted October 8, 2003.

California Environmental Protection Agency

Air Resources Board

Vapor Recovery Definitions

D-200

DEFINITIONS FOR VAPOR RECOVERY PROCEDURES

Adopted: April 12, 1996
Amended: March 17, 1999
Amended: February 1, 2001
Amended: July 3, 2002
Amended: October 8, 2003

California Environmental Protection Agency
Air Resources Board

Vapor Recovery Definitions

D-200

Definitions for
Vapor Recovery Procedures

1 APPLICABILITY

The terms and acronyms contained herein are applicable for the *Certification and Test Procedures for Vapor Recovery Systems at Gasoline Dispensing Facilities, Gasoline Bulk Plants, Gasoline Terminals, Cargo Tanks, and Novel Facilities*. They are intended as a clarification of the terms and acronyms used throughout the Certification and Test Procedures.

2 TERMS

aboveground storage tank
a system that uses a gasoline storage tank that is intended for fixed installations, without backfill, is located above or below grade and requires emergency relief venting.

airport refueller
a cargo tank which: has a total capacity no greater than 5000 gallons; exclusively transports avgas and jet fuel; and is not licensed for public highway use.

assist
a vapor recovery system, which employs a pump, blower, or other vacuum inducing devices, to collect and/or process vapors at a subject facility.

balance
a vapor recovery system which uses direct displacement to collect and/or process vapors at a subject facility.

blend valve
the valve in a dispenser that typically creates specific product grade by blending two other product grades in a ratio.

bootless nozzle
identifies a type of vapor recovery nozzle that does not have a bellows, or “boot,” over the length of the nozzle spout.

bulk plant

an intermediate gasoline distribution facility where delivery to and from storage tanks is by cargo tank.

cargo tank

any container, including associated pipes and fittings, that is used for the transportation of gasoline on any highway and is required to be certified in accordance with Section 41962 of the California Health and Safety Code.

certification procedures

document certified performance standards and performance specifications for vapor recovery systems, and document test procedures for determining compliance with such standards and specifications.

The purpose of such procedures is to provide certified performance standards and performance specifications for performance levels equal to or greater than those levels required by federal, state, and local statutes, rules, and regulations applicable at the time that any ARB Executive Order certifying a system is signed.

certification tests

tests which, as required by a certification procedure or an ARB Executive Order:

are performed before certification to determine compliance with a certified performance standard and

are performed after certification to determine compliance with a certified performance standard.

Note: Some ARB Executive Orders require periodic certification testing after certification. Also, compare with “compliance tests” below.

compartment

a liquid-tight division of a cargo tank.

compliance tests

tests which, as required by a certification procedure or an ARB Executive Order:

are performed before certification to evaluate and determine a certified performance specification and

are performed after certification to determine compliance with a certified performance specification.

district
any of California's local air pollution agencies, including the air pollution control districts and air quality management districts.

effective date
the date on which a provision has the effect of state law. The effective date “starts the clock” for the period of continuing use of installed vapor recovery systems/equipment under Health and Safety Code section 41956.1. The period may be up to four years after which the component and/or system may no longer be used.

emission factor
a performance standard expressed as pounds of hydrocarbon per 1,000 gallons of gasoline dispensed.

Executive Order
a document issued by the Executive Officer that certifies a vapor recovery system.

existing installation
any gasoline dispensing facility that is not a new installation.

fugitive emissions
those emissions of hydrocarbon vapors emitted from a GDF due to evaporative loss from spillage or may also include those pressure-related fugitive emissions as defined below.

gastight
exhibiting no vapor leak(s).

gasoline
any petroleum distillate having a Reid vapor pressure of four pounds or greater and meeting the requirements of title 13, California Code of Regulations, section 2250 et seq.

gasoline dispensing facility
a facility which dispenses gasoline to the end user.

hold-open latch
a certified device which is an integral part of the dispensing nozzle and is manufactured specifically for the purpose of dispensing gasoline without requiring the consumer's physical contact with the nozzle during fueling operations.

incinerator
any assist processor designed to control hydrocarbon emissions by any kind of oxidation which generates exhaust which is so hot and variable in volume

that such volume can only be determined by correlated measurements and thermodynamic principles, rather than direct measurement.

insertion interlock
any certified mechanism which is an integral part of a bellows-equipped dispensing nozzle which prohibits the dispensing of fuel unless the bellows has been compressed.

in station diagnostics
equipment that provides continuous real-time monitoring of critical emission-related vapor recovery system parameters and components, and alerts the station operator when a failure mode is detected so that corrective action is taken.

leak detection solution
any solution containing soap, detergent or similar materials which promote formation of bubbles, and which is used to wet joints or surfaces from which gas may be leaking, and which causes bubbles to form at the site of any escaping gas.

leak free
liquid leak of no greater than three drops per minute.

liquid condensate trap (knock-out pot, thief port)
a device designed to collect liquid that condenses in the vapor return line in a manner that allows it to be evacuated and ensures that the vapor return line will not be blocked by the accumulation of liquid.

liquid leak
the dripping of liquid organic compounds at a rate in excess of three (3) drops per minute from any single leak source other than the liquid fill line and vapor line disconnect operations. For cargo tanks, a liquid leak from liquid product line and vapor line disconnect operations is defined to be:

more than two (2) milliliters liquid drainage per disconnect from a top loading operation; or

more than ten (10) milliliters liquid drainage from a bottom loading operation. Such liquid drainage for disconnect operations shall be determined by computing the average drainage from three consecutive disconnects at any one permit unit.

liquid removal device
a device designed specifically to remove liquid from the vapor return portion of a vapor hose.

liquid retain

any liquid gasoline retained in the vapor passage of the nozzle/hose assembly, on the atmospheric side of the vapor check valve.

lower explosive limit (LEL)

the minimum volumetric fraction of combustible gas, in air, which will support the propagation of flame; commonly expressed in units of percent (%) or parts per million (ppm).

Standard references for physical properties of combustible gases differ by a few percent in their listed values for lower explosive limit (LEL) and differ also in terms employed. For clarity:

> "LEL" shall mean the same as "lower limit of flammability," "lower end of the explosive range", and other related terms in common technical discourse.
>
> The authoritative reference for determination of LEL values shall be the chapter GASEOUS FUELS, by C. C. Ward, pages 7-21 to 7-24 of *Marks' Standard Handbook for Mechanical Engineers*, Eighth Edition, McGraw Hill, New York, 1978.
>
> The LEL for propane is 2.1% (21,000 ppm).

major modification

the modification of an existing GDF that makes it subject to the same requirements to which a new installation is subject.

> Modification of the Phase I system that involves the addition, replacement, or removal of an underground storage tank, or modification that causes the tank top to be unburied, is considered a major modification of the Phase I system.
>
> Modification of the Phase II system that involves the addition, replacement or removal of 50 percent or more of the buried vapor piping, or the replacement of dispensers, is considered a major modification of the Phase II system. The replacement of a dispenser is not a major modification when the replacement is occasioned by end user damage to a dispenser. Phase II system upgrades to make the systems ORVR compatible do not constitute a major modification. Phase II system upgrades to comply with the under-dispenser containment requirement (CCR, Title 23, section 2636(h)(1)) initiated before January 1, 2004 do not constitute a major modification. Modifications to dispensers may require use of unihose configurations as described in CP-201 section 4.11.

multi-product dispenser

a dispenser of multiple products with one or more hoses per dispenser side.

National Institute of Standards and Technology

the United States Department of Commerce, National Institute of Standards and Technology (NIST) which, through its Standard Reference Materials (SRM) Program, provides science, industry, and government with a source of well-characterized materials certified for chemical composition or for some chemical or physical property. These materials are designated SRMs and are used to calibrate instruments and to evaluate analytical methods and systems, or to produce scientific data that can be referred readily to a common base.

new installation

a gasoline dispensing facility that is not constructed as of the operative date of the latest amendments to Certification Procedure CP-201 or a gasoline dispensing facility constructed as of the operative date of the latest amendments to Certification Procedure CP-201 that has undergone a major modification on or after the operative date of the amendments.

novel

a modifier which indicates a vapor recovery system (or system feature) or facility to which the written procedures (of general applicability) do not apply; for such a novel system or facility, new system-specific or facility-specific performance specifications and test procedures shall be developed and required as conditions of certification.

nozzle bellows (nozzle boot)

the flexible device around the spout of some vapor recovery nozzles, utilized to contain the vapor displaced from the vehicle.

on-board refueling vapor recovery system

vehicle based system required by title 13, California Code of Regulations, section 1978, or Part 86, Code of Federal Regulations.

operative date

the date on which a regulated person is first required to act or is prohibited from acting. The operative date determines when new installations and facilities undergoing major modifications must use equipment that meets the applicable standard.

over-fill prevention device

a device designed to stop the delivery of product to a storage tank to prevent the over-filling of the tank and potential spillage.

phase I
control of vapors during the transfer of gasoline from the cargo tank to the gasoline dispensing facility.

phase II
the control of vapors during the transfer of gasoline from the gasoline dispensing facility to the vehicle and storage of gasoline at the gasoline dispensing facility.

portable fuel container
any container or vessel that is designed or used primarily for receiving, transporting, storing, and dispensing fuel.

pressure-related fugitive emissions
those emissions of hydrocarbon vapors emitted from a GDF due to a positive gauge pressure in the headspace (ullage) of the gasoline storage tank. These emissions do not include transfer emissions at the nozzle/fillpipe interface nor the emissions from the vent pipe P/V valve, provided that the cracking pressure of the P/V valve has been exceeded.

processor
a vapor processor, either destructive or non-destructive, that operates to manage the pressure of the vapor in the gasoline storage tank within specified limits.

Reid Vapor Pressure
the absolute vapor pressure of volatile petroleum liquids, except liquefied petroleum gases, as determined in accordance with ASTM D323-89.

rigid piping
any piping material with a bend radius that exceeds six feet as determined by TP-201.2G.

spillage
liquid which enters the environment from a dispensing facility, except for liquid which leaves such dispensing facility in a vehicle tank or cargo tank.

The following definitions apply for the determination of spillage as defined above:

pre-dispensing spillage
spillage which occurs between:

the time when a dispensing nozzle is removed from a dispenser and

the time when the dispensing nozzle is inserted into the tank receiving the dispensed liquid

dispensing spillage
spillage which occurs between

the time when the dispensing nozzle is inserted into the tank receiving the dispensed liquid and

the time when the dispensing nozzle is withdrawn from the tank receiving the dispensed liquid

post-dispensing spillage
spillage which occurs between

the time when the dispensing nozzle is withdrawn from the tank receiving the dispensed liquid and

the time when the dispensing nozzle is returned to a dispenser.

spitback
the forcible ejection of liquid gasoline upon activation of the nozzle's primary shutoff mechanism.

static torque of phase I adaptor
the amount of torque, measured as pound-inches, required to start the rotation of a rotatable phase I adaptor as measured in accordance with TP-201.1B.

submerged fillpipe
any fillpipe which has its discharge opening entirely submerged when the liquid level is six inches above the bottom of the tank.

when referring to a tank which is loaded from the side, any fillpipe which has its discharge opening entirely submerged when the liquid level is 18 inches above the bottom of the tank.

summer fuel
fuel that is required to comply with the requirements of title 13, California Code of Regulations, section 2262.4.

test procedures
specify equipment and techniques for determining the performance and compliance status of vapor recovery systems relative to certified performance standards and associated certified performance specifications.

terminal

a primary distribution facility for the loading of cargo tanks that deliver gasoline to bulk plants, service stations and other distribution points; and where delivery to the facility storage tanks is by other than by cargo tank.

top off

the attempt to dispense gasoline to a motor vehicle or utility equipment fuel tank after the dispensing nozzle primary shutoff mechanism has engaged. The filling of a class of vehicle tanks which, because of the configuration of the fill pipe, cause premature activation of the primary shutoff, shall not be considered topping off.

transition flow

the flow rate at which a transition occurs in the slope of the plot of flow rate versus pressure for a valve tested per TP-201.2B.

ullage

the empty volume of any container. For example, the ullage of a tank designed primarily for containing liquid is the volume of the tank minus the volume of the liquid.

underground storage tank

any one or combination of tanks, including pipes connected thereto, which is used for the storage of gasoline, which is substantially or totally beneath the surface of the ground and does not have an emergency vent.

unihose dispenser

a multi-product dispenser that has only one hose and nozzle per dispenser side.

vapor guard (mini-boot)

a device that is permanently installed at the base of a bootless vapor recovery nozzle spout to enhance the effectiveness of vapor collection.

vapor leak

a vapor leak measured as less 10,000 parts per million on a methane calibrated gas detector, measured at a minimum distance of one centimeter from the source in accordance with EPA Reference Method 21, compliance with the static pressure integrity requirements as determined by TP-201.3, or the absence of bubbles using a liquid leak detector solution.

vapor recovery system

a vapor gathering system capable of collecting the hydrocarbon vapors and gases discharged and a vapor disposal system capable of processing such hydrocarbon vapors and gases so as to prevent their emission into the atmosphere, with all tank gauging and sampling devices gastight except when gauging or sampling is taking place.

vapor recovery system for gasoline dispensing facility (GDF)
all equipment used at a GDF to recover, contain, and transfer gasoline vapors generated by refueling vehicle tanks, gasoline storage tanks, and portable fuel containers, including, but not limited to, dispensing equipment, couplers, fittings, processors, control boards, gauges, and monitors.

vent
any plumbing which conveys an air/vapor mixture from a vapor recovery system to the atmosphere.

winter fuel
fuel that is not required to comply with the regulations that are applicable to summer fuel.

3 ACRONYMS

ACF
actual cubic feet (see CF, CFH, and CFM) at sampling conditions.

APCD
one of California's Air Pollution Control Districts.

AQMD
one of California's Air Quality Management Districts.

A/L Ratio or A/L
air to liquid ratio.

ARB
Air Resources Board.

ARB Executive Officer or Executive Officer
the Executive Officer of the ARB or his or her authorized representative or designate.

AST
aboveground storage tank

CARB
California Air Resources Board.

CCR
California Code of Regulations.

CF

cubic feet.

CFR
Code of Federal Regulations.

CT#
cargo tank number issued by the Executive Officer.

CFH
cubic feet per hour.

CFM
cubic feet per minute.

DMS
California Department of Food and Agriculture, Division of Measurement Standards.

DOSH
California Department of Industrial Relations, Division of Occupational Safety and Health.

Eng. Eval.
engineering evaluation.

EO
Executive Order.

FID
flame ionization detector.

GC/FID
gas chromatograph with flame ionization detector.

GDF
gasoline dispensing facility.

H&SC
California Health and Safety Code.

ID
inside diameter.

ID#
identification number.

ISD
In-Station Diagnostics.

LDS
leak detection solution.

LEL
lower explosive limit.

LPM
liters per minute.

mmHg
millimeters of mercury (unit of pressure).

MPD
multi-product dispenser.

N_2
nitrogen gas.

NDIR
non-dispersive infrared.

NEMA
National Electrical Manufacturers Association

NIST
National Institute of Standards and Technology.

NPT
National pipe threads

ORVR
onboard refueling vapor recovery.

PV or P/V Valve
pressure/vacuum relief vent valve.

SFM
California State Fire Marshal.

Sec.
section.

Spec.

specification.

Std.
standard.

UST
underground storage tank.

WC
water column (unit of pressure normally expressed in inches).

WC_g
water column, gauge (unit of pressure normally expressed in inches).

ATTACHMENT 6

CERTIFICATION
and
EXCESS EMISSION REPORTS
REQUIREMENTS

Permittee: 45-0164-01
Speedway LLC dba Speedway # 7159
Location: 1065 Deep Springs Rd.
Dandridge
Permit Number: 969580G

1. The owner or operator of this facility has demonstrated to the Technical Secretary a compliance certification by inspection. Certification included the following:

   (a) For initial compliance certification, as a minimum:

      1. Name and location of the facility.

      2. Address and telephone number of the person responsible for the facility.

      3. Identification of facility as gasoline dispensing facility.

   (b) For the facility, as a minimum:

      1. The applicable equipment specification, or work practice;

      2. The method of achieving compliance;

      3. The control system(s) in use;

      4. Certification that the tanks, plumbing, and regulated equipment at the facility are in compliance with the applicable equipment specifications, or work practices.

      5. List any tank that fulfills the "exemption" criteria of 1200-03-18-.24(1)(b)1.

2. The owner or operator of this facility shall, for each occurrence of excess emissions, within 30 calendar days of becoming aware of such occurrence, supply the Technical Secretary with the following information:

   (a) The name and location of the facility;

   (b) The subject tanks, plumbing, or equipment that caused the excess emissions;

   (c) The time and date of first observation of the excess emissions;

   (d) The cause and expected duration of the excess emissions;

   (e) The proposed corrective actions and schedule to correct the conditions causing the excess emissions.