Specification sheet

Spark ignited generator set 50 kW standby

Features and benefits

- Extremely quiet operation
- Fully automatic operation when used with a Cummins automatic transfer panel
- Available for use with natural gas or LP vapor
- Attractive and discreet sound attenuated housing
- Electronic governor for precise frequency control
- Includes 120 V coolant heater
- Listed to UL 2200
- EPA certified for dual fuel
- Aluminum or steel enclosure for best anti-corrosion performance
- IBC and OSHPD seismic certified

Weight, size and sound level

Weight: 2634 lbs (1195 kg) with aluminum enclosure; 2891 lb (1311 kg) with steel enclosure

Size: Length 101.5 in (2578 mm), width 41.3 in (1049 mm), height 71.8 in (1824 mm)

Sound: 67 dB(A) at 7 m, average at full load with aluminum enclosure; 65 dB(A) at 7 m, average at full load with steel enclosure

Models and ratings

Order model	Fuel	Voltage	Rated kW	kVa	Rated amps	Circuit breaker	Enclosure
GGPC	Natural gas/propane dual fuel	120/240	45/50	45/50	375/187.5 ng 416/208 propane	200 A, 2 pole	Aluminum or steel

- Ratings apply at 1300 ft (396m), 104 °F (40 °C). Total power available will decrease 4% for each 1000 ft (304.8 m) above 1300 ft (396m) and 2% for each 10 °F (5.5 °C) increase in ambient temperature above 104 °F (40 °C).

Our energy working for you.™

©2012 Cummins Inc. | A-1563b (12/12)

cumminspower.com
cumminsonan.com

Standard features

Engine:

- Electronic ignition
- Electronic governor
- Full-pressure lubrication
- High-capacity oil sump
- Single spin-on canister-combination full flow with bypass
- Solenoid shift starter
- 120 V coolant heater
- Engine oil drain extension

Control system:

Provides total genset system integration including:

- Automatic remote starting/stopping
- Precise frequency and voltage regulation
- Alarm and status message display
- AmpSentry™ protection
- Output metering
- Auto-shutdown at fault detection
- NFPA 110 Level 1 compliance
- Low coolant level shut-down

Exhaust muffler:

- Enclosed exhaust silencer
- Low noise

Engine details

Engine: GM industrial, spark-ignited

Design: Cast iron V8 cylinder, liquid-cooled

Compression ratio: 9.4:1

Displacement: 5 L (305 in^3)

Cooling system: 122° F (50 °C) ambient cooling system

Oil sump capacity: 5.8 qt

Operating speed: 1800 RPM

Gross engine power output, kWm (bhp):
Natural gas: 57.6 (77.3)
Propane: 63.6 (85.3)

Average fuel consumption

Fuel consumption – natural gas

Load:	1/4	1/2	3/4	Full
Ft^3/hr	282	392.8	512	645.9
M^3/hr:	8	11.1	14.5	18.3

Fuel consumption - propane

Load:	1/4	1/2	3/4	Full
Ft^3/hr	113.3	160.6	215.4	270.2
M^3/hr:	3.2	4.5	6.1	7.7
Gal/hr	3.1	4.4	5.9	7.4
L/hr	11.8	16.8	22.5	28.2

Conversion factor:
8.58 ft^3 = 1 lb
0.535m^3 = 1 kg
36.39 ft^3 = 1 gal

Alternator details

Design: Brushless, revolving field, 12 lead re-connectable, single phase design.

Insulation system: Class H per NEMA MG1-1.65.

Temperature rise: At rated load is less than 125 °C at standby rating, per NEMA MG1.22.40, IEEE 115 and IEC 34-1.

Exciter type: The excitation system derives its power from the main output of the generator, eliminating the need for a separate excitation power source.

Alternator cooling: Direct drive centrifugal blower.

Rotor: Supported by a pre-lubricated maintenance-free ball bearing.

AC wave form total harmonic distortion: Less than 5% total no load to full load, less than 3% for any single harmonic.

Generator set performance

Voltage: 120/240 V AC, single phase, 1.0 pf.

Governor regulation class: ISO 8528 Part 1 Class G3

Voltage regulation: 1%, no load to full load.

Frequency regulation: Isochronous, 0% no load to full load.

Operating temperature: -20 °F (-28.8 °C) to 122 °F (50 °C).

Motor starting kVA (at 90% sustained voltage): 130

Our energy working for you.™

©2012 Cummins Inc. | A-1563b (12/12)

cumminspower.com
cumminsonan.com

Basic dimensions

Dimensions: mm/in

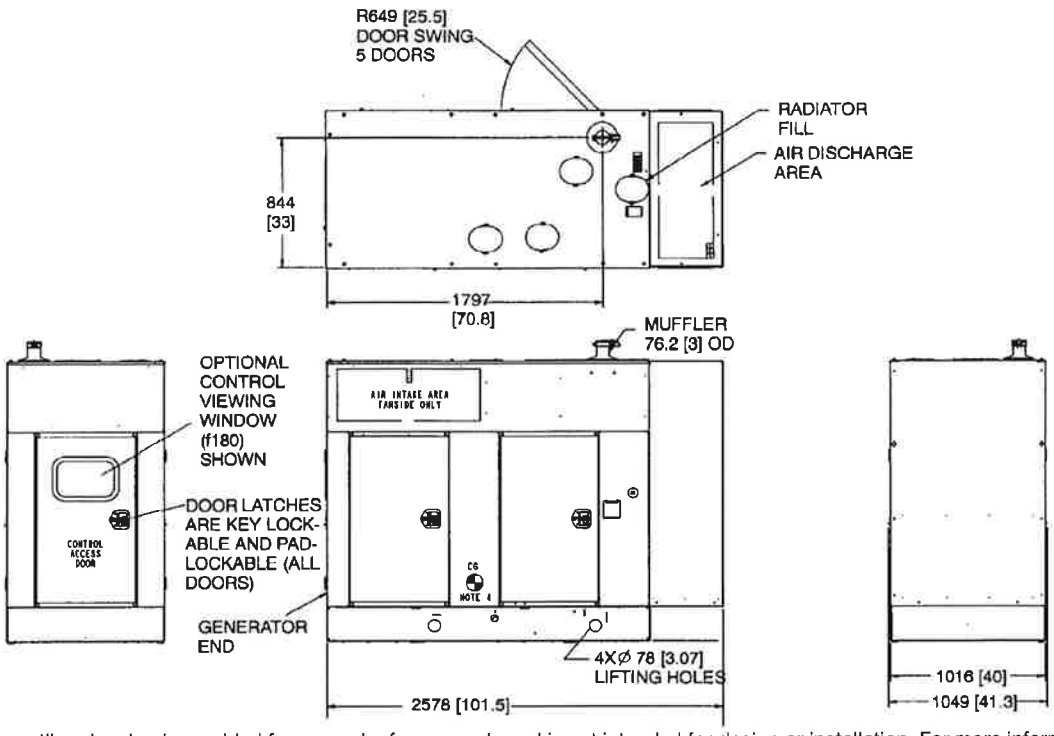

Note: This outline drawing is provided for general reference only and is not intended for design or installation. For more information see Operation and Installation manuals.

Automatic transfer panel configurations

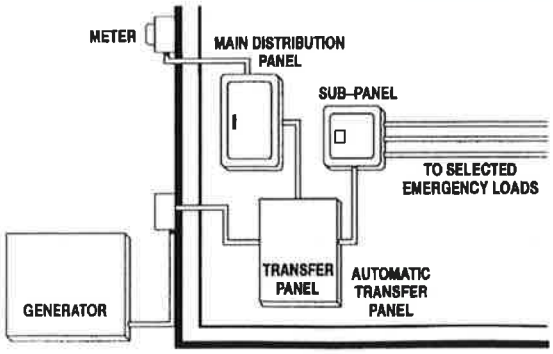

Dedicated emergency standby service system

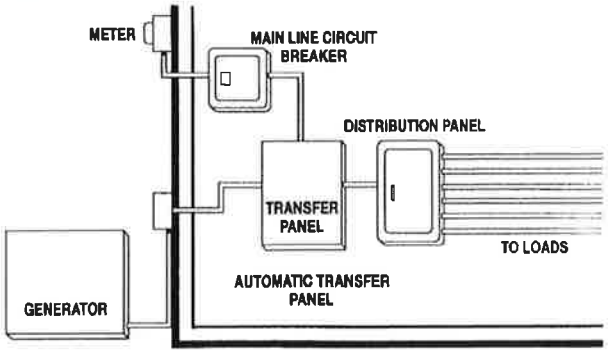

Full-service rating standby system

Options and accessories

- Battery, 12 V, 620 cca (P/N 416-0823)
- Battery heater kit (P/N 333-0469)
- Full line of complementing automatic transfer panels

Housing features

- Sound attenuated, weather protective design, key-lockable service access doors
- Internal starting battery tray and tie down
- Heavy-duty aluminum or steel housing, stainless steel fasteners

Our energy working for you.™

©2012 Cummins Inc. | A-1563b (12/12)

cumminspower.com
cumminsonan.com

Testing and standards

- Listed to UL 2200
- This generator set was designed and manufactured in facilities certified to ISO 9001.
- All low voltage models are CSA certified to product class 4215-01.

U.S. EPA

Warranty policy

Cummins generators come with a standard two-year warranty. Additional two and five-year warranty options are available. Some restrictions apply.

This product is EPA Emissions certified for emergency standby use only.

WARNING:

Standby rating based on: Applicable for supplying emergency power for the duration of normal power interruption. No sustained overload capability is available for this rating. (Equivalent to fuel stop power in accordance with ISO3046, AS2789, DIN6271 and BS5514.) nominally rated.

WARNING:

Back feed to a utility system can cause electrocution and/or property damage. Do not connect to any building electrical except through an approved device or after building main breaker is open.

After sale support

Largest distributor/dealer support network

Cummins generator sets are supported by the largest and best trained worldwide certified distributor/dealer network in the industry. This network of knowledgeable Cummins distributor/dealers will help you select and install the right generator set and accessories to meet the requirements of your specific application. This same network offers a complete selection of commonly used generator set maintenance parts, accessories and products plus manuals and specification sheets. Plus, they can answer your questions regarding proper operation, maintenance schedules and more.

Manuals: Operation and installation manuals ship with the generator set. To obtain additional copies or other manuals for this model, see your Cummins distributor/dealer.

To easily locate the nearest Cummins distributor/dealer for Cummins generators in your area, or for more information, contact us at 1-800-344-0039 or visit www.cumminsonan.com or www.cumminspower.com.

Contact your distributor/dealer for more information.

North America
1400 73rd Avenue N.E.
Minneapolis, MN 55432
USA

Phone 763 574 5000
Fax 763 574 5298

Our energy working for you.™

©2012 Cummins Inc. All rights reserved.
Cummins is a registered trademark of Cummins Inc.
"Our energy working for you." is a trademark of Cummins Power Generation. Other company, product, or service names may be trademarks or service marks of others. Specifications are subject to change without notice.
A-1563b (12/12)

cumminspower.com
cumminsonan.com

Power Generation

Exhaust Emission Data Sheet
50GGPC
60 Hz Spark Ignited Generator Set
EPA Emissions

Engine Information:

Model:	GM 5.0L	Bore:	3.75 in. (95.3 mm)
Type:	4 Cycle, V-8 Cylinder Spark-Ignited	Stroke:	3.48 in. (88.4 mm)
Aspiration:	Naturally aspirated	Displacement:	305 cu. in. (5.0 liters)
Compression Ratio:	9.4:1		
Emission Control Device:	Electronics Air/Fuel Ratio Control and Closed-loop Breather System		

	Natural Gas	Propane
PERFORMANCE DATA	**Standby**	**Standby**
Genset Rating (kW) @1800 RPM (60 Hz)	45	50
BHP @ 1800 RPM (60 Hz)	72	79
Fuel Consumption (SCFH)	646	270
Air to Fuel Ratio	16.5:1	14.8:1
Exhaust Gas Flow (CFM)	377	378
Exhaust Gas Temperature (°F)	1184	1204
EXHAUST EMISSION DATA		
HC (Total Unburned Hydrocarbons)*	1337	1174
NOx (Oxides of Nitrogen as NO_2)	1736	1870
CO (Carbon Monoxide)	13000	20200
		Values are ppmvd
HC (Total Unburned Hydrocarbons)*	2.0	1.5
NOx (Oxides of Nitrogen as NO_2)	6.9	6.9
CO (Carbon Monoxide)	34.5	50.2
		Values are Grams per HP-Hour

*HC includes all NMHC, VOC, POC, and ROC constituents (Non-Methane HC, Volatile Organic Compounds, Precursor Organic Compounds, and Reactive Organic Compounds)

TEST CONDITIONS

Data was recorded during steady-state rated engine speed (± 25 RPM) with full load (±2%). Pressures, temperatures, and emission rates were stabilized.

Fuel Specification:	
Natural Gas:	Dry gas as received from Supplier (1000 BTU/SCF).
Propane:	Meets the requirements for Commercial Grade Propane under the ASTM D1835 Standard Specification for Liquefied Gases
Fuel Temperature	60 ± 9 °F at Flow Transmitter
Fuel Pressure	14.73PSIA ± 0.5 PSIA at Flow Transmitter
Intake Air Temperature:	77 ± 9 °F at inlet
Barometric Pressure:	29.92 in. Hg ± 1 in. Hg
Humidity:	NOx measurement corrected to 75 grains H_2O/lb dry air

The NOx, HC, and CO emission data tabulated here were from a single engine under the test conditions shown above. These data are subjected to instrumentation and engine-to-engine variability. Field emission test data are not guaranteed to these levels. Actual field test results may vary due to test site conditions, installation, fuel specification, test procedures and instrumentation. Engine operation with excessive air intake or exhaust restriction beyond published maximum limit, or with improper maintenance, may results in elevated emission levels.

Power Generation

EPA Exhaust Emission Compliance Statement GGPC Propane standby

60 Hz Spark Ignited Generator Set

Compliance Information:

The engine used in this generator set complies with U.S. EPA emission regulations under the provisions of 40 CFR Part 60, Stationary Emergency Spark-Ignited emissions limits when tested per ISO 8178 D2.

Engine Manufacturer:	Cummins Inc
EPA Certificate Number:	CCEXB05.0GDA-006
Effective Date:	11/02/2011
Date Issued:	11/02/2011
EPA Engine Family:	CCEXB05.0GDA

Engine Information:

Model:	GM 5.0L	Bore:	3.75 in. (95.3 mm)
Engine Nameplate HP:	85.3		
Type:	4 Cycle, V-8 Cylinder Spark-Ignited	Stroke:	3.48 in. (88.4mm)
Aspiration:	Naturally aspirated	Displacement:	305 cu. in. (5.0 liters)
Compression Ratio:	9.4:1		

Emission Control Device: Electronics Air/Fuel Ratio Control and Closed-loop Breather System

U.S. Environmental Protection Agency Stationary Emergency SI Emission Limits

(All values are Grams per HP-Hour)

COMPONENT	
HC + NOx (Total Unburned Hydrocarbons and Oxides of Nitrogen)	10
CO (Carbon Monoxide)	387

Engine operation with excessive air intake or exhaust restriction beyond published maximum limits, or with improper maintenance, may result in elevated emission levels.