KEC

KING ENGINEERING CONSULTANTS
INCORPORATED

3355 Poplar Avenue
Suite 200
Memphis, TN 38111-4676

Telephone 901/323-1000
901/324-1516
Fax 901/324-1516

November 27, 2013

2013 DEC 10 PM 3:50

Division of Air Pollution Control
William R. Snodgrass TN Tower
312 Rosa L. Parks Ave., 15th Floor
Nashville, TN 37243

Re: 2010 CDBG-D
Bradford, Tennessee

Gentlemen/Ladies:

Enclosed are the following items for the referenced project:

1. Form APC 100 for the fire station generator and the City generator
2. Form APC 102 for each generator
3. Manufacturer's certificate of conformity and cut sheets for each generator
4. Application fee of $200

Your review and approval are requested.

Sincerely,

KING ENGINEERING CONSULTANTS, INC.

Ken King
KK:pw

Enclosures

State of Tennessee
Department of Environment and Conservation
Division of Air Pollution Control
William R. Snodgrass Tennessee Tower
312 Rosa L. Parks Avenue, 15th Floor
Nashville, TN 37243
Telephone: (615) 532-0554

2013 DEC 10 PM 3:50

NON-TITLE V PERMIT APPLICATION
FACILITY IDENTIFICATION

Please type or print and submit in duplicate for each emission source. Attach appropriate source description forms.

SITE INFORMATION

1. Organization's legal name: CITY OF BRADFORD		For APC use only	APC Company point no.: 27-0239-01
2. Site name (if different from legal name): CITY HALL			APC Log/Permit no.: 9680604
3. Site address (St./Rd./Hwy.): 216 E. MAIN STREET			County name: GIBSON
City or distance to nearest town: BRADFORD	Zip code: 38316		4. NAICS or SIC code: 921110
5. Site location (in lat. /long.)	Latitude: N 36° 04' 36"		Longitude: W 88° 48' 33"

CONTACT INFORMATION (RESPONSIBLE PERSON)

6. Responsible person/Authorized contact: MAYOR FRANK LOCKARD			Phone number with area code: 731-742-3465
Mailing address (St./Rd./Hwy.): 216 E. MAIN STREET			Fax number with area code: 731-742-2969
City: BRADFORD	State: TN.	Zip code: 38316	Email address:

CONTACT INFORMATION (TECHNICAL)

7. Principal technical contact: KEN KING (CITY ENGINEER)			Phone number with area code: 901-323-1000
Mailing address (St./Rd./Hwy.): 3355 POPLAR AVE. SUITE 200			Fax number with area code: 901-324-1516
City: MEMPHIS	State: TN.	Zip code: 38111	Email address: KINGENGINEERING@BELLSOUTH.NET

CONTACT INFORMATION (BILLING)

8. Billing contact: MELISSA WORKMAN			Phone number with area code: 731-742-3465
Mailing address (St./Rd./Hwy.): 216 E. MAIN STREET			Fax number with area code: 731-742-2969
City: BRADFORD	State: TN	Zip code: 38316	Email address: BCRECORDER@GMAIL.COM

EMISSION SOURCE INFORMATION

9. Emission source no. (number which uniquely identifies this source): 216

10. Brief description of emission source:

40 KW, STATIONARY STAND-BY 1 ØPH, 120-240V EMERGENCY GENERATOR FOR CITY HALL

11. Normal operation:	Hours/Day	Days/Week	Weeks/Year	Days/Year: 2 DAYS/YEAR
12. Percent annual throughput	Dec. – Feb.: 25%	March – May: 25%	June – August: 25%	Sept. – Nov.: 25%

(Over)

TYPE OF PERMIT REQUESTED				
13. Operating permit ( )	Date construction started	Date completed	Last permit no.	Emission source reference number
Construction permit (✓)	Last permit no. NEW APPLICATION		Emission source reference number	
If you choose Construction permit, then choose either New Construction, Modification, or Location transfer				
	New Construction (✓)	Starting date 11/19/2013	Completion date 4/18/2014	
	Modification ( )	Date modification started or will start	Date completed or will complete	
	Location transfer ( )	Transfer date	Address of last location	

14. Describe changes that have been made to this equipment or operation since the last construction or operating permit application:

FIRST APPLICATION FOR EQUIPMENT.

SIGNATURE

Based upon information and belief formed after a reasonable inquiry, I, as the responsible person of the above mentioned facility, certify that the information contained in this application and any attached application(s) is accurate and true to the best of my knowledge. As specified in TCA Section 39-16-702(a)(4), this declaration is made under penalty of perjury.

15. Signature (application must be signed before it will be processed)		Date
Frank Lockard		12-2-2013
Signer's name (type of print)	Title	Phone number with area code
FRANK LOCKARD	MAYOR	731-742-3465

Table of Pollution Reduction Device or Method Codes

Note: For cyclones, settling chambers, wet scrubbers, and electrostatic precipitators; the efficiency ranges correspond to the following percentages:
High: 95-99+%. Medium: 80-95% And Low: Less than 80%.
If the system has several pieces of connected control equipment, indicate the sequence. For example: 008'010.97%
If none of the below codes fit, use 999 as a code for other and specify in the comments.

No Equipment....000
Activated Carbon Adsorption....048
Afterburner – Direct Flame....021
Afterburner – Direct Flame with Heat Exchanger....022
Afterburner – Catalytic....019
Afterburner – Catalytic with Heat Exchanger....020
Alkalized Alumina....040
Catalytic Oxidation – Flue Gas Desulfurization....039
Cyclone – High Efficiency....007
Cyclone – Medium Efficiency....008
Cyclone – Low Efficiency....009
Dust Suppression by Chemical Stabilizers or Wetting Agents....062
Electrostatic Precipitator – High Efficiency....010
Electrostatic Precipitator – Medium Efficiency....011
Electrostatic Precipitator – Low Efficiency....012
Fabric Filter – High Temperature....016
Fabric Filter – Medium Temperature....017
Fabric Filter – Low Temperature....018
Fabric Filter – Metal Screens (Cotton Gins)....059
Flaring....023
Gas Adsorption Column -- Packed....050
Gas Adsorption Column – Tray Type....051
Gas Scrubber (General: Not Classified)....013
Limestone Injection – Dry....041
Limestone Injection – Wet....042
Liquid Filtration System....049
Mist Eliminator – High Velocity....014
Mist Eliminator – Low Velocity....015
Process Change....046
Process Enclosed....054
Process Gas Recovery....060
Settling Chamber – High Efficiency....004
Settling Chamber – Medium Efficiency....005
Settling Chamber – Low Efficiency....006
Spray Tower (Gaseous Control Only)....052
Sulfuric Acid Plant – Contact Process....043
Sulfuric Acid Plant – Double Contact Process....044
Sulfur Plant....045
Vapor Recovery System (Including Condensers, Hooding and Other Enclosures)....047
Venturi Scrubber (Gaseous Control Only)....053
Wet Scrubber – High Efficiency....001
Wet Scrubber – Medium Efficiency....002
Wet Scrubber – Low Efficiency....003
Wet Suppression by Water Sprays....061

Table of Emission Estimation Method Codes

Not application / Emissions are known to be zero....0
Emissions based on source testing....1
Emissions based on material balance using engineering expertise and knowledge of process....2
Emissions calculated using emission factors from EPA publications No. AP-42 Compilation of Air Pollution Emissions Factors....3
Judgment....4
Emissions calculated using a special emission factor different from that in AP-42....5
Other (Specify in comments)....6

State of Tennessee
Department of Environment and Conservation
Division of Air Pollution Control
William R. Snodgrass Tennessee Tower
312 Rosa L. Parks Avenue, 15th Floor
Nashville, TN 37243
Telephone: (615) 532-0554

2013 DEC 10 PM 3:50

NON-TITLE V PERMIT APPLICATION
PROCESS OR FUEL BURNING SOURCE DESCRIPTION

Please type or print and submit in duplicate and attach to the Non-Title V Facility Identification Form (APC 100).

GENERAL IDENTIFICATION AND DESCRIPTION

1. Organization name CITY OF BRADFORD	For APC use only	APC Company – Point no.
2. Emission source no. (As on Non-Title V Facility Identification Form) 216		APC Log/Permit no.

3. Description of process unit

40 KW, STATIONARY STAND BY 1 ØPH, 120-240V
EMERGENCY GENERATOR FOR CITY HALL

PROCESS SOURCE DESCRIPTION AND DATA

4. Type of source	(Check only one option below)
Process Source: Apply for a separate Permit for each source. (Check at right and complete lines 5, 6, and 11)	( )
Process Source with in process fuel: Products of combustion contact materials heated. Apply for a separate permit for each source. (Check at right and complete lines 5, 6, and 8 through 11)	( )
Non-Process fuel burning source: Products of combustion do not contact materials heated. Complete this form for each boiler or fuel burner and complete a Non-Title V Emission Point Description Form (APC 101) for each stack. (Check at right and complete lines 7 to 11)	(✓)

5. Type of operation:	Normal batch time	Normal batches/day
Continuous ( ) Batch (✓)	EMERGENCY USE ONLY	EMERGENCY USE ONLY

6. Process material inputs and In-process solid fuels	Diagram reference	Input rates (pounds/hour) Design	Actual
A.			
B.			
C.			
D.			
E.			
F.			
G.			
Totals			

* A simple process flow diagram must be attached.

(Over)

BOILER, BURNER, GENERATOR, OR SIMILAR FUEL BURNING PROCESS DESCRIPTION

7. Boiler or burner data: (Complete lines 7 to 11 using a separate form for each boiler, burner, etc.)

Number	Stack number**	Type of firing***	Rated horsepower	Rated input capacity (10^6 BTU/Hr.)	Other rating (specify capacity and units)
216		COMBUSTION	74		55 KW

Serial no.	Date constructed	Date manufactured	Date of last modification (explain in comments below)

** Source with a common stack will have the same stack number.
*** Cyclone, spreader (with or without reinjection), pulverized (wet or dry bottom, with or without reinjection), other stoker (specify type, hand fired, automatic, or other type (describe below in comments).

FUEL USED IN BOILER, BURNER, GENERATOR, OR SIMILAR FUEL BURNING SOURCE

8. Fuel data: (Complete for a process source with in process fuel or a non-process fuel burning source)

Primary fuel type (specify)	Standby fuel type(s) (specify)

Fuels used	Annual usage	Hourly usage		%	%	BTU value		(For APC use only)
		Design	Average	Sulfur	Ash	of fuel		SCC code
Natural gas:	10^6 Cu. Ft.	Cu. Ft.	Cu. Ft.	/ / / / / / / /	/ / / / /	1,000		
#2 Fuel oil: DIESEL LOW OR ULTRA LOW SULFUR	10^3 Gal.	Gal.	Gal. 4.3/hr		/ / / / /			
#5 Fuel oil:	10^3 Gal.	Gal.	Gal.		/ / / / /			
#6 Fuel oil:	10^3 Gal.	Gal.	Gal.		/ / / / /			
Coal:	Tons	Lbs.	Lbs.					
Wood:	Tons	Lbs.	Lbs.	/ / / / / / / /	/ / / / /			
Liquid propane:	10^3 Gal.	Gal.	Gal.	/ / / / / / / /	/ / / / /	85,000		
Other (specify type & units):								

9. If Wood is used as a fuel, specify types and estimate percent by weight of bark

N/A

10. If Wood is used with other fuels, specify percent by weight of wood charged to the burner.

N/A

11. Comments

UNITED STATES ENVIRONMENTAL PROTECTION AGENCY
OFFICE OF TRANSPORTATION AND AIR QUALITY
WASHINGTON, DC 20460

CERTIFICATE OF CONFORMITY
2011 MODEL YEAR

Manufacturer:	**JOHN DEERE POWER SYSTEMS**
Engine Family:	**BJDXL04.5130**
Certificate Number:	**JDX-NRCI-11-28**
Intended Service Class:	**NR (37-56)**
Fuel Type:	**DIESEL (LOW OR ULTRA-LOW SULFUR)**
FELs: g/kW-hr	NMHC + NOx: **NA** NOx: **NA** PM: **NA**
Effective Date:	**10/7/2010**
Date Issued:	**10/7/2010**

Karl J. Simon, Director
Compliance and Innovative Strategies Division
Office of Transportation and Air Quality

Pursuant to Section 111 and Section 213 of the Clean Air Act (42 U.S.C. sections 7411 and 7547) and 40 CFR Part 60 and Part 1039, and subject to the terms and conditions prescribed in those provisions, this certificate of conformity is hereby issued with respect to the test engines which have been found to conform to applicable requirements and which represent the following stationary and nonroad engines, by engine family, more fully described in the documentation required by 40 CFR Part 60 and 1039, and produced in the stated model year.

This certificate of conformity covers only those new stationary and nonroad compression-ignition engines which conform in all material respects to the design specifications that applied to those engines described in the documentation required by 40 CFR Part 60 and 1039 and which are produced during the model year stated on this certificate of the said manufacturer, as defined in 40 CFR Part 60 and 1039.

This certificate of conformity is conditional upon compliance of said manufacturer with the averaging, banking and trading provisions of 40 CFR Part 1039, Subpart H. Failure to comply with these provisions may render this certificate void ab initio.

It is a term of this certificate that the manufacturer shall consent to all inspections described in 40 CFR Part 1068 and authorized in a warrant or court order. Failure to comply with the requirements of such a warrant or court order may lead to a revocation or suspension of this certificate for reasons specified in 40 CFR Part 1039. It is also a term of this certificate that this certificate may be revoked or suspended or rendered void ab initio for other reasons specified in 40 CFR Part 1039.

This certificate does not cover stationary and nonroad engines sold, offered for sale, or introduced, or delivered for introduction, into commerce in the U.S. prior to the effective date of the certificate.

California Environmental Protection Agency **Air Resources Board**	JOHN DEERE POWER SYSTEMS	**EXECUTIVE ORDER U-R-004-0463** New Off-Road Compression-Ignition Engines

Pursuant to the authority vested in the Air Resources Board by Sections 43013, 43018, 43101, 43102, 43104 and 43105 of the Health and Safety Code; and

Pursuant to the authority vested in the undersigned by Sections 39515 and 39516 of the Health and Safety Code and Executive Order G-02-003;

IT IS ORDERED AND RESOLVED: That the following compression-ignition engines and emission control systems produced by the manufacturer are certified as described below for use in off-road equipment. Production engines shall be in all material respects the same as those for which certification is granted.

MODEL YEAR	ENGINE FAMILY	DISPLACEMENT (liters)	FUEL TYPE	USEFUL LIFE (hours)
2013	DJDXL04.5130	4.5	Diesel	8000

SPECIAL FEATURES & EMISSION CONTROL SYSTEMS	TYPICAL EQUIPMENT APPLICATION
Direct Diesel Injection, Turbocharger	Pump, Compressor, Generator Set, Other Industrial Equipment

The engine models and codes are attached.

The following are the exhaust certification standards (STD), or family emission limit(s) (FEL) as applicable, and certification levels (CERT) for hydrocarbon (HC), oxides of nitrogen (NOx), or non-methane hydrocarbon plus oxides of nitrogen (NMHC+NOx), carbon monoxide (CO), and particulate matter (PM) in grams per kilowatt-hour (g/kw-hr), and the opacity-of-smoke certification standards and certification levels in percent (%) during acceleration (Accel), lugging (Lug), and the peak value from either mode (Peak) for this engine family (Title 13, California Code of Regulations, (13 CCR) Section 2423):

RATED POWER CLASS	EMISSION STANDARD CATEGORY		EXHAUST (g/kw-hr)					OPACITY (%)		
			NMHC	NOx	NMHC+NOx	CO	PM	ACCEL	LUG	PEAK
37 ≤ kW < 56	Tier 4 Final	STD	N/A	N/A	4.7	5.0	0.03	20	15	50
		FEL	--	--	--	--	0.30	--	--	--
		CERT	--	--	4.6	1.2	0.29	2	1	4

BE IT FURTHER RESOLVED: That the family emission limit(s) (FEL) is an emission level declared by the manufacturer for use in any averaging, banking and trading program and in lieu of an emission standard for certification. It serves as the applicable emission standard for determining compliance of any engine within this engine family under 13 CCR Sections 2423 and 2427.

BE IT FURTHER RESOLVED: That for the listed engine models, the manufacturer has submitted the information and materials to demonstrate certification compliance with 13 CCR Section 2424 (emission control labels), and 13 CCR Sections 2425 and 2426 (emission control system warranty).

Engines certified under this Executive Order must conform to all applicable California emission regulations.

This Executive Order is only granted to the engine family and model-year listed above. Engines in this family that are produced for any other model-year are not covered by this Executive Order.

Executed at El Monte, California on this 28 day of December 2012.

Annette Hebert, Chief
Mobile Source Operations Division

PowerTech ™ M
4045TF290 Diesel Engine

Generator Drive Engine Specifications

JOHN DEERE

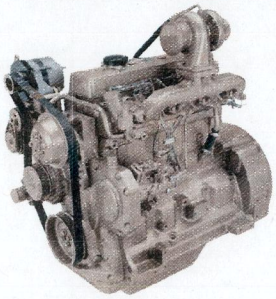

4045TF290 shown

Dimensions

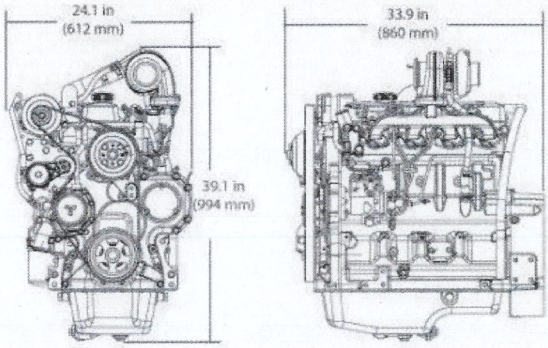

Certifications

CARB

EPA Interim Tier 4

General data

Model	4045TF290	Aspiration	Turbocharged
Number of cylinders	4	Length - mm (in)	860 (33.9)
Displacement - L (cu in)	4.5 (275)	Width - mm (in)	612 (24.1)
Bore and Stroke-- mm (in)	106 x 127 (4.17 x 5.00)	Height-- mm (in)	994 (39.1)
Compression Ratio	19.0:1	Weight, dry-- kg (lb)	396 (873)
Engine Type	In-line, 4-Cycle		

Performance data

Prime power at 60 Hz (1800 rpm)	50 kW (67 hp)
Standby power at 60 Hz (1800 rpm)	55 kW (74 hp)

The prime power gen-set engine rating is the nominal power an engine is capable of delivering with a variable load for an unlimited number of hours per year with normal maintenance intervals observed. This rating incorporates a 10% overload capability which is available for up to 2 hours at a time. Operating time between 100% and 110% of the prime power rating is not to exceed 8% of the total engine operating time. This rating conforms to ISO 8528-1 "prime power (PRP)". The permissible average power for the prime or PRP rating is not to exceed 70% of rated prime power when calculated per ISO 8528-1.

The standby gen-set engine rating is the nominal engine power available at varying load factors for up to 200 hours per year with normal maintenance intervals observed. No overload capability is available for this rating. This rating conforms to ISO 8528-1 "Emergency Standby Power (ESP)". The permissible average power for the standby or ESP rating is calculated per ISO 8528-1.

Photographs may show non-standard equipment.

CLARKE POWER GENERATION INC.

50 kWe / 60 Hz/ Stationary Stand-by
120-240V, 1Ø
120-480V, 3Ø

STANDARD EQUIPMENT

Engine
- Air Cleaner
- Oil Pump
- Full Flow Oil Filter
- Jacket Water Pump
- Thermostats
- Exhaust Manifold
- Blower Fan and Fan Drive
- Radiator- Unit Mounted
- Electric Starting Motor - 12V
- Governor- Mechanical
- Base- Formed Steel
- SAE Flywheel and Bell Housing
- Charging Alternator - 12V
- Battery Box and Cables
- Flexible Fuel Connectors
- EPA Certified Engine

Generator
- NEMA MG1, IEEE and ANSI Standards Compliance for Temperature Rise and Motor Starting
- Self-ventilated and Drip-proof
- Superior Voltage Waveform
- Solid State, Volts-per-Hertz Regulator
- No Load to Full Load Regulation
- Brushless, Alternator with Brushless Pilot Exciter
- 4 Pole, Rotating Field
- 130°C Stand-by Temperature Rise
- 1 Bearing, Sealed
- Flexible Coupling
- Full Amortisseur Windings
- 125% Rotor Balancing
- 3-Phase Voltage Sensing
- ± 1% Voltage Regulation
- 100% of Rated Load- One Step
- 3% Maximum Harmonic Content

Digital Control Panel(s)
- Digital Metering, Microprocessor Based
- Engine Parameters, Displayable
- Generator Protection Functions
- Engine Protection
- SAE J 1939 Engine ECU Communications
- Windows-Based Software
- Multi-lingual Capability
- Remote Communications to Clarke Remote Annunciator
- 7 Programmable Contact Inputs
- 7 Contact Outputs
- UL Recognized, CE Approved
- 116 Events Recording
- IP 65 Front Panel Rating with Integrated Gasket
- NFPA 110 Level 1 Compatible

APPLICATION DATA

Engine

Manufacturer	John Deere
Model	4045TF290
Type	4-Cycle
rangement	4-Inline
Displacement: L (in³)	4.5 (275)
Bore: cm (in)	10.6 (4.2)
Stroke: cm (in)	12.7 (5.0)
Compression ratio	19.0:1
Rated RPM	1,800
Engine Governor	Mechanical
Maximum Power: Stand-by: kWm (bhp)	55 (74)
Speed Regulation	± 3.0%
Air Cleaner	Dry

Liquid Capacity (Lubrication)

Total Oil System: L (gal)	7.9 (2.1)
Engine Jacket Water Capacity: L (gal)	2.6 (0.68)
System Coolant Capacity: L (gal)	11.4 (3)

Electrical

Electric Volts DC	12
Cold Cranking Amps Under -17.8°C (0°F)	750

Fuel System

uel Supply Connection Size	3/8" NPT
Fuel Return Connection Size	3/8" NPT
Maximum Fuel Lift: M (Ft.)	3 (10)
Recommended Fuel	Diesel #2
Total Fuel Flow: L/Hr (Gal/Hr)	112.9 (29.9)

Fuel Consumption	STAND-BY
At 100% of Power Rating: L/ Hr (Gal/ Hr)	16.3 (4.3)
At 75% of Power Rating: L/ Hr (Gal/ Hr)	12.1 (3.2)
At 50% of Power Rating: L/ Hr (Gal/ Hr)	8.3 (2.2)

Cooling-Radiator System	STAND-BY
Ambient Capacity of Radiator: °C (°F)	50 (122)
Maximum Restriction of Cooling Air, Intake, and Discharge Side of Radiator: kPa (in. H_2O)	0.12 (0.5)
Water Pump Capacity: L/ Min (GPM)	144 (38)
Heat Rejection to Coolant: kW (BTUM)	31 (1,765)
Heat Rejection to Air: kW (BTUM)	N/A
Heat Radiated to Ambient: kW (BTUM)	9 (510)

Air Requirements	STAND-BY
Aspirating*: m³/ min (SCFM)	4.3 (151)
Air Flow Required for Rad. Cooled Unit: *m³/ min (SCFM)	156 (5,506)

* Air Density= 1.184 Kg/ M³ (0.0739 lbm/ ft³)

Exhaust System	STAND-BY
Gas Temperature (Stack): °C (°F)	537 (999)
Gas Volume at Stack Temperature: m³/ min (CFM)	12.7 (448)
Maximum Allowable Back Pressure: kPa (in H_2O)	7.5 (30)

ENGINE PERFO. ANCE CURVE

JOHN DEERE

Rating: Gross Power
Application: Generator
50 kWe Standby Market
1800 RPM (60 Hz)

PowerTech™ M 4.5L Engine
Model: 4045TF290

67 hp (50 kW) Prime
74 hp (55 kW) Standby

Nominal Engine Power @ 1800 RPM			
Prime		Standby	
HP	kW	HP	kW
67	50	74	55

Generator Efficiency %	Fan Power (% of Standby)		Power Factor	Prime Rating		Standby Rating		ISO 8528 G2 Block Load Capability
	hp	kW		kWe	kVA	kWe	kVA	
88-92	2.5	1.9	0.8	42-44	53-55	47-49	59-62	NA

Note 1: Based on nominal engine power.
Note 2: kWe/kVA rating assumes 90% efficiency."Generator Efficiency %" will vary.

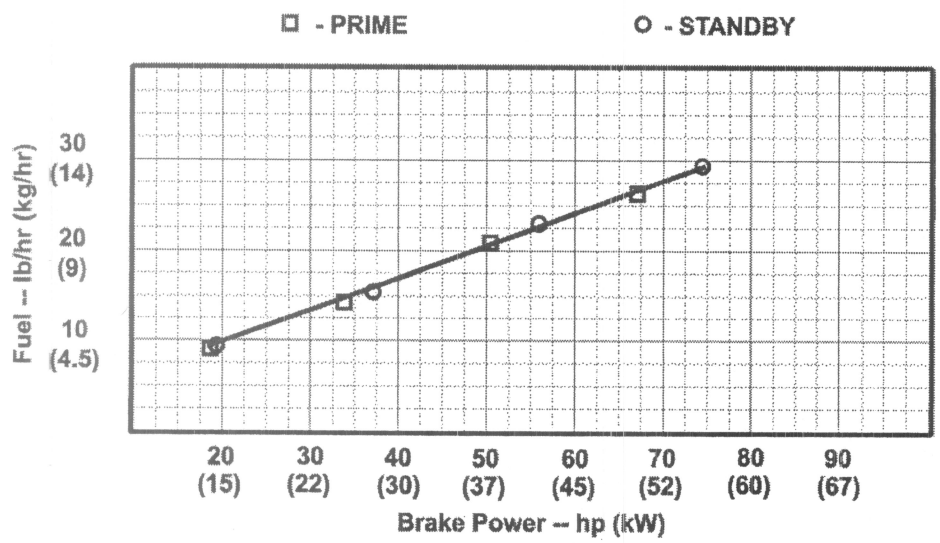

STANDARD CONDITIONS

Air Intake Restriction.....12 in.H_2O (3 kPa)
Exhaust Back Pressure.....60 in.H_2O (15 kPa)

Gross power guaranteed within + or - 5% at SAE J1995 and ISO 3046 conditions:
- 77 °F (25 °C) air inlet temperature
- 29.31 in.Hg (99 kPa) barometer
- 104 °F (40 °C) fuel inlet temperature
- 0.853 fuel specific gravity @ 60 °F (15.5 °C)

Conversion factors:
- Power: kW = hp x 0.746
- Fuel: 1 gal = 7.1 lb, 1 L = 0.85kg
- Torque: N·m = lb-ft x 1.356

All values are from currently available data and are subject to change without notice.

Notes:
1) This Performance Curve provides installation requirements necessary for the engine to emit at its certified emission levels. For additional information necessary to meet applicable regulatory requirements, refer to the John Deere Emissions-related Installation Instructions: https://jdpower.deere.com/psdistrib/engapp/App_Guidelines/AG01.pdf. - - -
2) A crankshaft Torsional Vibration Analysis is required on all Gen Set applications.

Designed/Calibrated to meet:	Certified by:
• CARB • EPA Ref: Engine Emission Label	*Advance Information*

Performance Curve: 4045TF290_B

Engine Installation Criteria

General Data

Model	4045TF290	
Number of Cylinders	4	
Bore	106 mm	4.2 in.
Stroke	127 mm	5.0 in.
Displacement	4.5 L	275 in.³
Compression Ratio	19.0:1	
Valves per Cylinder, Intake/Exhaust	1 / 1	
Firing Order	1-3-4-2	
Combustion System	Direct Injection	
Engine Type	In-line, 4-Cycle	
Aspiration	Turbocharged	
Engine Crankcase Vent System	Open	

Physical Data

Length	860 mm	33.9 in.
Width	612 mm	24.1 in.
Height	994 mm	39.1 in.
Weight, with oil &no coolant (Includes engine, flywheel housing, flywheel &electrics)	396 kg	873 lb
Center of Gravity Location, X-axis From Rear Face of Block	269 mm	10.6 in.
Center of Gravity Location, Y-axis Right of Crankshaft	-8 mm	-0.3 in.
Center of Gravity Location, Z-axis Above Crankshaft	151 mm	5.9 in.
Max. Allowable Static Bending Moment At Rear Face of Flywheel Housing with 5-G Load	814 N·m	600 lb-ft
Thrust Bearing Load Limit Forward, Intermittent	4003 N	900 lb
Thrust Bearing Load Limit Forward, Continuous	2224 N	500 lb
Thrust Bearing Load Limit Rearward, Intermittent	2000 N	450 lb
Thrust Bearing Load Limit Rearward, Continuous	1000 N	225 lb
Max. Torsional Vibration, Front of Crank	0.25 DDA	

Electrical System

Recommended Battery Capacity, 12V @32 °F (0 °C)	640 amps
Recommended Battery Capacity, 24V @32 °F (0 °C)	570 amps
Starter Rolling Current, 12V @32 °F (0 °C)	780 amps
Starter Rolling Current, 24V @32 °F (0 °C)	600 amps
Starter Rolling Current, 12V @-22 °F (-30 °C)	1000 amps
Starter Rolling Current, 24V @-22 °F (-30 °C)	700 amps
Max. Allowable Start Circuit Resistance, 24V	0.002 Ohm
Max. Allowable Start Circuit Resistance, 12V	0.0012 Ohm
Max. Voltage From Engine to Crankshaft, 12V	0.15 volts
Max. Voltage From Engine to Crankshaft, 24V	0.15 volts

Cooling System

Engine Heat Rejection, Prime	29 kW	1651 BTU/min
Engine Heat Rejection, Standby	31 kW	1765 BTU/min
Coolant Flow	144 L/min	38 gal/min
Thermostat Start to Open	82 °C	180 °F
Thermostat Fully Open	94 °C	201 °F
Engine Coolant Capacity	8.5 Liter	9.0 quart
Min. Pressure Cap	100 kPa	15 psi
Max. Water Pump Inlet Pressure	kPaa	
Min. Pump Inlet Pressure @194°F (90°C) Coolant	kPaa	
Min. Pump Inlet Pressure @203°F (95°C) Coolant	kPaa	
Min. Pump Inlet Pressure @Max. Top Tank Temperature	kPaa	
Min. External Coolant Restriction	kPa	
Max. External Coolant Restriction	kPa	
Max. Top Tank Temperature	110 °C	230 °F
Max. Top Tank Temperature 95% of Operating Hours	°C	
Min. Limiting Ambient Temperature	47 °C	117 °F
Min. Coolant Fill Rate	11 L/min	2.9 gal/min

Performance Curve: 4045TF290_B

Engine Insta on Criteria

Exhaust System

Exhaust Flow, Prime	12.0 m³/min	424 ft.³/min
Exhaust Flow, Standby	12.7 m³/min	448 ft.³/min
Exhaust Temperature, Prime	506 °C	943 °F
Exhaust Temperature, Standby	537 °C	999 °F
Max. Allowable Exhaust Restriction	7.5 kPa	30 in. H_2O
Min. Allowable Exhaust Restriction	0 kPa	0 in. H_2O
Max. Bending Moment on Turbo Outlet	7.0 N·m	5.2 lb-ft
Max. Shear on Turbine Outlet	11 kg	24 lb
Exhaust Filter Size		
Min. Mixing Length, Outlet to Exhaust Filter	mm	
Max. Bending Moment on Exhaust Filter Inlet	N·m	
Max. Bending Moment on Exhaust Filter Outlet	N·m	
Max. Exhaust Leakage Rate, Engine to Exhaust Filter @30kPa	L/min	
Max. Temperature Drop, Engine to Exhaust Filter	°C	

Fuel System

Fuel Injection Pump	Stanadyne DB4	
Governor Type	Mechanical	
Total Fuel Flow, Prime	96.0 kg/hr	212 lb/hr
Total Fuel Flow, Standby	96.0 kg/hr	212 lb/hr
Fuel Consumption, Prime	12.1 kg/hr	27 lb/hr
Fuel Consumption, Standby	13.4 kg/hr	30 lb/hr
Min. Fuel Inlet Pressure	kPa	
Max. Fuel Inlet Pressure	20 kPa	80 in. H_2O
Max. Fuel Return Pressure	20 kPa	80 in. H_2O
Min. Fuel Return Pressure	kPa	
Max. Fuel Inlet Temperature	80 °C	176 °F
Fuel Filter @98% Efficiency	mic	

Lubrication System

Oil Pressure at Rated Speed	345 kPa	50 psi
Oil Pressure at Low Idle	kPa	
Max. In-Pan Oil Temperature	°C	
Max. Oil Carryover in Blow-By	1.0 g/hr	0.002 lb/hr
Max. Airflow in Blow-By	100 L/min	26.4 gal/min
Max. Crankcase Pressure	0.5 kPa	2 in. H_2O

Air Intake System

Engine Air Flow, Prime	4.3 m³/min	152 ft.³/min
Engine Air Flow, Standby	4.5 m³/min	159 ft.³/min
Intake Manifold Pressure, Prime	48 kPa	7.0 psi
Intake Manifold Pressure, Standby	54 kPa	7.8 psi
Maximum Allowable Temperature Rise, Ambient Air to Engine Inlet	8 Δ°C	15 Δ°F
Max. Air Intake Restriction, Clean Air Cleaner	3 kPa	12.0 in. H_2O
Max. Air Intake Restriction, Dirty Air Cleaner	6.25 kPa	25.0 in. H_2O
Air Cleaner Efficiency		99.9 %

Performance Curve: 4045TF290_B

Engine Insta on Criteria

Performance Data

Rated Power, Prime	50 kW	67 HP
Rated Power, Standby	55 kW	74 HP
Rated Speed		1800 rpm
Low Idle Speed		1150 rpm
Rated Torque, Prime	265 N·m	195 lb-ft
Rated Torque, Standby	292 N·m	215 lb-ft
BMEP, Prime	737 kPa	107 psi
BMEP, Standby	810 kPa	117 psi
Altitude Capability, Prime	3048 m	10000 ft
Altitude Capability, Standby	3048 m	10000 ft
Friction Power @Rated Speed	13 kW	17 HP
Air:Fuel Ratio, Prime		25.6 : 1
Air:Fuel Ratio, Standby		24.4 : 1
Smoke @Rated Speed Prime		1.8 Bosch No.
Smoke @Rated Speed Standby		2.2 Bosch No.
Noise @1 m Prime		86.0 dB(A)
Noise @1 m Standby		86.3 dB(A)

Fuel Consumption	Prime		Standby	
	lb/hr	kg/h	lb/hr	kg/h
25 % Power	9.0	4.1	9.0	4.1
50 % Power	13.9	6.3	15.2	6.9
75 % Power	20.5	9.3	23.1	10.5
100 % Power	26.7	12.1	29.5	13.4

Performance Curve: 4045TF290_B

NECTION INLET & OUTLET, INSULATED JCS SILENCER	JCS-04X-90014409	PHILLIPS & TEMRO
NECTION INLET & OUTLET, INSULATED JCS SILENCER	JCS-05X-90014484	PHILLIPS & TEMRO
NECTION INLET & OUTLET, INSULATED JCS SILENCER	JCS-06X-90014432	PHILLIPS & TEMRO
NECTION INLET & OUTLET, INSULATED JCS SILENCER		PHILLIPS & TEMRO
NNECTION INLET & OUTLET, INSULATED JCS SILENCER		PHILLIPS & TEMRO

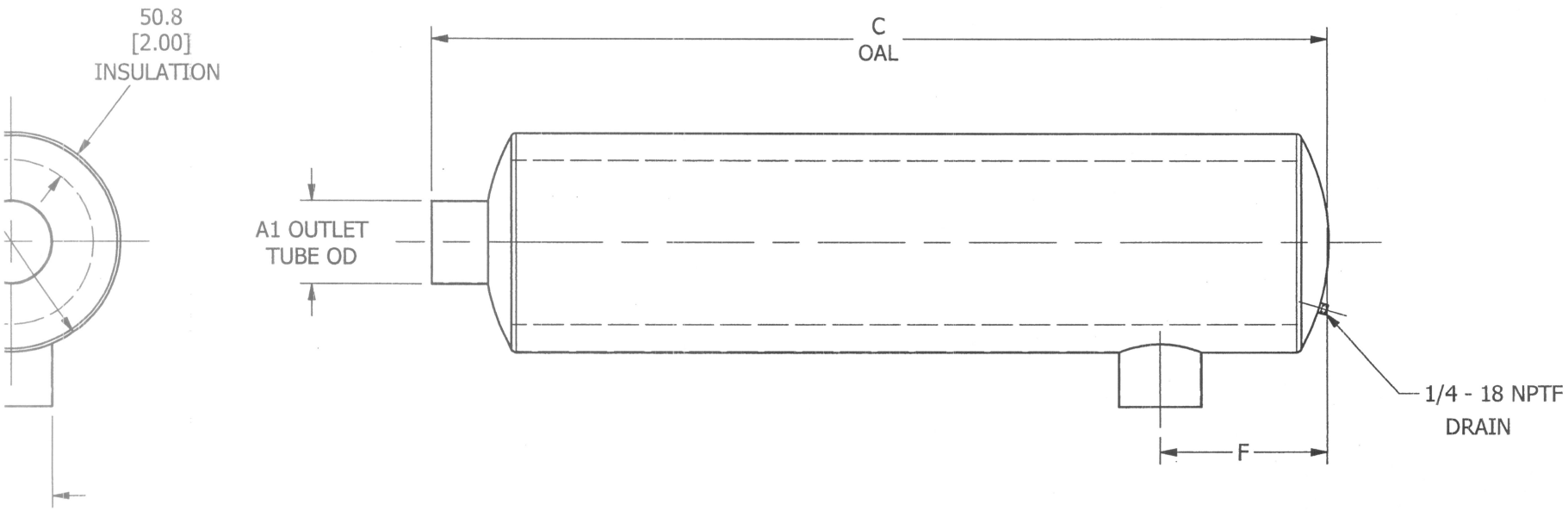

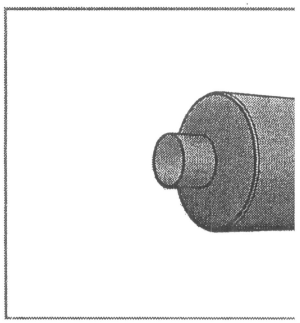

CRITICAL GRADE INSULATED SILENCERS

N	SIZE	A	A1	B	C	E	F
	2 INCH	50.8 [2.0]	50.8 [2.0]	254.0 [10.0]	1009.7 [39.75]	190.5 [7.5]	184.2 [7.25]
	~~2.5 INCH~~	~~63.5 [2.5]~~	~~63.5 [2.5]~~	~~304.8 [12.0]~~	~~1012.9 [39.88]~~	~~215.9 [8.5]~~	~~187.5 [7.38]~~
	3 INCH	76.2 [3.0]	76.2 [3.0]	304.8 [12.0]	1032.0 [40.63]	228.6 [9.0]	187.5 [7.38]
	4 INCH	101.6 [4.0]	101.6 [4.0]	355.6 [14.0]	1358.9 [53.50]	266.7 [10.5]	234.9 [9.25]
	5 INCH	127.0 [5.0]	127.0 [5.0]	406.4 [16.0]	1659.9 [65.35]	304.8 [12.0]	311.2 [12.25]
	6 INCH	152.4 [6.0]	152.4 [6.0]	406.4 [16.0]	1659.9 [65.35]	304.8 [12.0]	311.2 [12.25]
	8 INCH	203.2 [8.0]	203.2 [8.0]	558.8 [22.0]	2298.7 [90.50]	381.0 [15.0]	419.1 [16.5]
	10 INCH	254.0 [10.0]	254.0 [10.0]	660.4 [26.0]	2667.0 [105.0]	431.8 [17.0]	508.0 [20.0]

THIS DRAWING AND THE INFORMATION HEREON ARE OUR PROPERTY AND MAY BE USED BY OTHERS ONLY AS AUTHORIZED BY US. UNPUBLISHED--ALL RIGHTS RESERVED UNDER THE COPYRIGHT LAWS

MACHINE TOLERANCE

YES ☐ NO ☒

CONTROLLED DRAWING

DRAWN

City of Bradford
P. O. Box 87
Bradford, TN 38316

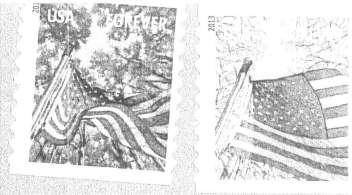

Division of Air Pollution Control
William R. Snodgrass TN Tower
312 Rosa L. Parks Ave., 15th Floor
Nashville, Tn. 37243