SOP000069
ESD

TENNESSEE DEPARTMENT OF AGRICULTURE
Water Resources Program

March 16, 2011

Ms. Erin O'Brien
TDEC
L&C Annex, 6th Floor
Nashville, Tennessee 37243

Dear Ms. O'Brien:

I am writing to inform you that I have reviewed the application and Nutrient Management Plan (NMP) for CAFO permit for Mr. Charles Mason in Cleveland, Tennessee (previous NPDES Permit NO. TNA000166).

This letter is to confirm that the TDA has reviewed and approved the CNMP. I have enclosed a copy of the Nutrient Management Plan Requirements form and the original signed and dated Notice of Intent (NOI) form, Addendum to Nutrient Management Plan, Closure Plan, NMP, and stamped Approval Stamp form for your review and final approval.

Sincerely,

Angela L. Warden
CAFO Specialist

RECEIVED
MAR 21 2011
TN Division Of Water
Pollution Control

: //enclosures

ec:// Mr. Wayne Coates, NRCS District Conservationist, Bradley County, TN

Ellington Agricultural Center
440 Hogan Road
Nashville, TN 37220
Telephone: 615-837-5492 Fax: 615-837-5025

TENNESSEE DEPARTMENT OF AGRICULTURE

Water Resources Program

The following individual has submitted all required elements of an **individual NPDES permit** for a **Class I CAFO**. Their Nutrient Management Plan (or CNMP) has been reviewed and approved by this office.

Name of Owner/Operator: Charles Mason

Operation Name: Charles Mason Poultry Farm

Address of Operation: 151 Sandridge Road, S.E. Cleveland, TN 37323

Phone Number: (423) 476-4629 County: Bradley

Date application was initiated:

RECEIVED
JAN 05 2011

Date approval forwarded to TDEC:

MAR 16 2011

NMP/CNMP Approval Date:

THE APPROVAL SHALL NOT BE CONSTRUED AS CREATING A PRESUMPTION OF CORRECT

MAR 16 2011

OPERATION OR AS WARRANTING THAT THE APPROVED FACILITIES WILL REACH THE DESIGNED GOALS

Date approval received by TDEC

RECEIVED
MAR 21 2011
TN Division Of Water Pollution Control

TDA Reviewer's Name: Angela Warden

TDA Reviewer's Signature: Angela D. Warden 3/16/11
Date

#167
Charles Mason Poultry Farm Cleveland, TN

1/11/11
Bradley Co.

Nutrient Management Plan Requirements

The following 9 items need to be submitted at the time the permit is applied for. Additional record-keeping items as outlined in the CAFO rules are also considered part of the nutrient management plan and must be kept on-site. More information on each item can be found in the CAFO rule (1200-4-5-.14).

1. **Two maps: (1.)** A map of your farm showing location of any animal barns/houses, compost bins, litter storage bins, manure lagoons/holding ponds, nearby roads, fields to which litter/manure will be applied, and non-application buffer areas around any bodies of water (streams, creeks, rivers, ponds, wells, sinkholes, springs, wetlands, etc.). A hand-drawn map is acceptable and even preferred. **(2.)** A topographic map of the farm (1:24000 scale, showing 1-mile radius from farm) showing property lines.
2. **Nutrient budget** – this is basically a balance sheet of all manure produced on the farm and all manure spread on the farm or removed from the farm. Application rates for all fields should be based on crop needs, realistic crop yield expectations, and actual manure analyses of nutrient content.
3. **Soil test results** for phosphorus and potassium for each application field. These must be taken at a minimum of every five years.
4. Results of **manure analysis** from within the past year. Annual manure testing is a requirement for all CAFOs. These results must be included with initial permit application if the farm is in operation. If the farm that is applying for the permit is new and not yet operating, then manure testing results need to be obtained once operation begins. At that point, the manure test results and revised application rates need to be submitted to TDA. Manure test results in subsequent years need to be kept as part of your record-keeping activities.
5. Results of the **Phosphorus Index** applied to each field that has a soil test P value of "High" or "Very High". In those situations, this tool will determine whether your application rates will be based on nitrogen or phosphorus.
6. Statement regarding method of **dead animal disposal**.
7. **Closure Plan** to be implemented in the event animal production ceases on the site.

These last two items are only required for medium-size CAFOs that manage **liquid manure**.

8. Documentation of **design of liquid waste handling system**. This should include, but is not limited to: volume for solids accumulation, design treatment volume, total design volume, the approximate number of days of storage capacity, pumping and routing of wastes, and any solid separation process. Ideally, this documentation would consist of the pertinent engineering drawings with accompanying descriptive narrative.
9. The construction, modification, repair, or installation of any portion of a CAFO liquid waste handling system (such as earthen holding pond, treatment lagoon, pit, sump or other earthen storage/containment structure) after April 13, 2006 must be preceded by a thorough **subsurface investigation**. This investigation will include a detailed soils investigation with special attention to the water table depth and seepage potential.

In addition to the items above, the following form(s) must accompany your application:

***Notice of Intent* form** must be submitted with all applications from Class II (Medium) CAFOs

OR

EPA Forms 1 and 2B must be submitted with all applications from Class I (Large) CAFOs.

Addendum to Nutrient Management Plan.

#184

Tennessee Department of Environment and Conservation,
Division of Water Pollution Control
401 Church Street, 6th Floor L & C Annex, Nashville, TN 37243
(615) 532-0625

CONCENTRATED ANIMAL FEEDING OPERATION (CAFO)
STATE OPERATING PERMIT (SOP)
NOTICE OF INTENT (NOI)

Type of permit you are requesting: ☐ SOPCD0000 (designed to discharge) ☑ SOPC00000 (no discharge) ☐ Unknown, please advise

Application type: ☐ New Permit ☐ Permit Reissuance ☐ Permit Modification

If this NOI is submitted for Permit Modification or Reissuance provide the existing permit tracking number: _____

OPERATION IDENTIFICATION

Operation Name: Charles Mason Poultry Farm	County: Bradley
Operation Location/ Physical Address: 151 Sandidge Rd. S.E. Cleveland TN. 37323	Latitude: 35° 3' 50.34" Longitude: 84° 47' 42.45"
Name and distance to nearest receiving water(s): 1 mile	
If any other State or Federal Water/Wastewater Permits have been obtained for this site, list those permit numbers: Current CAFO Permit	
Animal Type: ☑ Poultry ☐ Swine ☐ Dairy ☐ Beef ☐ Other _____	
Number of Animals: 46,000	Number of Barns: 2 — Name of Integrator: Koch Food
Type of Animal Waste Management: (check all that apply)	☑ Dry ☐ Liquid ☐ Liquid, Closed System (i.e. covered tank, under barn pit, etc.)
Attach the NMP ☑ NMP Attached	Attach the closure plan ☑ Closure Plan Attached — Attach a topographic map ☑ Map Attached

PERMITTEE IDENTIFICATION

Official Contact (applicant): Charles Mason	Title or Position: Landowner			☑ Correspondence ☑ Invoice
Mailing Address: 151 Sandidge RD S.E.	City: Cleveland	State: TN	Zip: 37323	
Phone number(s): (423) 476-4629	E-mail:			
Optional Contact:	Title or Position:			☐ Correspondence ☐ Invoice
Address:	City:	State:	Zip:	
Phone number(s):	E-mail:			

APPLICATION CERTIFICATION AND SIGNATURE (must be signed in accordance with the requirements of Rule 1200-4-5-.05)

I certify under penalty of law that this document and all attachments were prepared under my direction or supervision in accordance with a system designed to assure that qualified personnel properly gather and evaluate the information submitted. Based on my inquiry of the person or persons who manage the system, or those persons directly responsible for gathering the information, the information submitted is, to the best of my knowledge and belief, true, accurate, and complete. I am aware that there are significant penalties for submitting false information, including the possibility of fine and imprisonment for knowing violations.

Name and title; print or type	Signature	Date
Charles L Mason	Charles L Mason	12-29-10

STATE USE ONLY

Received Date: RECEIVED MAR 21 2011	Reviewer	EFO	T & E Aquatic Fauna	Tracking No.
	Impaired Receiving Stream	High Quality Water		NOC Date

RECEIVED JAN 5 2011

TN Division Of Water Pollution Control

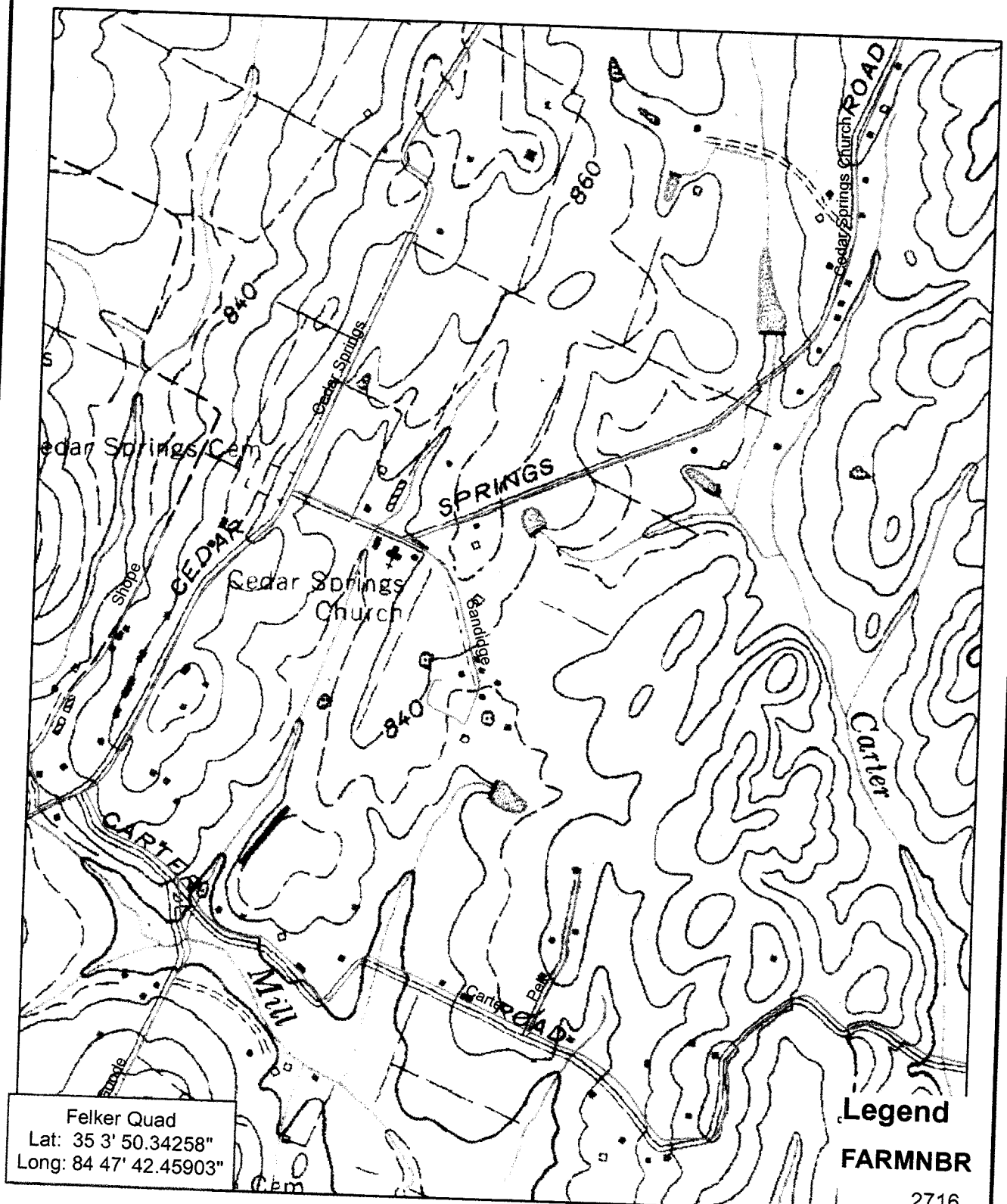

Felker Quad
Lat: 35 3' 50.34258"
Long: 84 47' 42.45903"

Legend

FARMNBR

2716

1,000 500 0 1,000 2,000 3,000 4,000 Feet

1 inch equals 1,000 feet

Charles Mason

RECEIVED
JAN 5 2011

Addendum to Nutrient Management Plan:

By my signature below, I affirm that I have read, understand, and will comply with the following stipulations from Tennessee's CAFO rule (1200-4-5-.14) that apply to my CAFO operation.

1) All clean water (including rainfall) is diverted, as appropriate, from the production area.
2) All animals in confinement are prevented from coming in direct contact with waters of the state.
3) All chemicals and other contaminants handled on-site are not disposed of in any manure, litter, process wastewater, or storm water storage or treatment system unless specifically designed to treat such chemicals and other contaminants.
4) All sampling of soil and manure/litter is conducted according to protocols developed by UT Extension.
5) All records outlined in 1200-4-5-.14(16)d-f will be maintained and available on-site.
6) Any confinement buildings, waste/wastewater handling or treatment systems, lagoons, holding ponds, and any other agricultural waste containment/treatment structures constructed after April 13, 2006 are or will be located in accordance with NRCS Conservation Practice Standard 313.
7) Drystacks of manure or stockpiles of litter are always kept covered under roof or tarps.
8) An *Annual Report* will be written for my operation and submitted between January 1 and February 15 of each year. It will include all information required by rule [1200-4-5-.14(16)g].

Charles L Mason — 12-29-10

Signature of CAFO Operator: Date:

RECEIVED

MAR 21 2011

TN Division Of Water Pollution Control

RECEIVED

JAN 5 2011

32

CLOSER PLAN

In the event this operation ceases to exist, the following will be done within 360 days:

- Any litter/compost currently in storage at the time of closure will be removed and spread on the farm or spread elsewhere according to my Nutrient Management Plan.
- All litter in houses will be removed and spread on the farm or spread elsewhere according to my Nutrient Management Plan.
- All land application of litter will be done at application rates calculated in the Nutrient Management Plan.
- The most current litter analysis will be provided to anyone removing litter from the farm.
- Any dead birds in the houses at the time of closure will be composted.

CHARLES L MASON 12-29-10

Charles Mason Date

RECEIVED
MAR 21 2011
TN Division Of Water
Pollution Control

RECEIVED
JAN 5 2011

Waters Agricultural Laboratories, Inc.

Manure/Sludge Analysis and Application Report

*P.O. Box 382 * 257 Newton Highway * Camilla, Georgia 31731-0382 * phone: (229) 336-7216*

Ship To:	Grower: CHARLES MASON	
CHARLES MASON 151 SANDIDGE ROAD CLEVELAND, TN 37323-	SampleNumber 1 Lab Number: 25692 Type: LITTER	Date Submitted: 02/04/2011 Report Date: 02/08/2011

	Percent (%)	Pounds per Ton
Nitrogen - Total	3.12	62.4
P2O5 - Total	2.72	54.4
K2O - Total	3.13	62.6

Moisture	29.37 %	

Results Reported On: W=WET(AS RECEIVED)BASIS

Remarks

This document may be reproduced only in its entirety. Waters Agricultural Laboratories has no control over the manner in which samples are taken, therefore, analysis is based solely on the sample as received. Lab liability is limited to the fee assessed on the referenced sample.

RECEIVED
MAR 21 2011
TN Division Of Water
Pollution Control

RECEIVED
FEB 16 2011

engineering | environment | health & safety | technology

creative thinking. **custom solutions.** ®

ENSAFE

COMPREHENSIVE NUTRIENT MANAGEMENT PLAN

FOR

CHARLES MASON POULTRY FARM

151 SANDIDGE ROAD
CLEVELAND, TN 37323
PHONE: (423) 476-4629

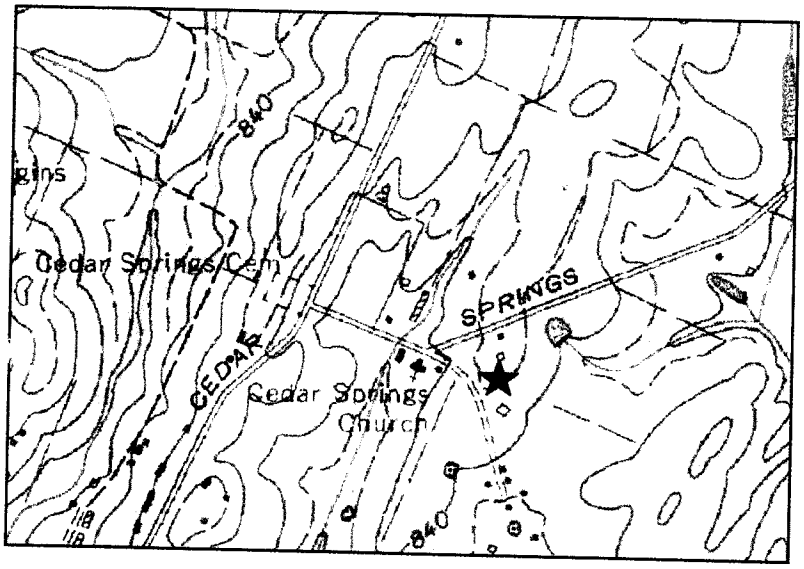

December 16, 2010

(Directions to farm: From Cleveland, TN, take Hwy 74 south to Cedar Springs Rd SE, then east to Cedar Springs Church Rd SE, then south onto Sandidge Rd. SE.)

8-digit HUC# TN03150101

RECEIVED

MAR 21 2011

TN Division Of Water Pollution Control

Prepared by EnSafe Inc. in cooperation with:

NRCS Natural Resources Conservation Service

USDA Service Center
770 Stuart Road NE
Cleveland, TN 37312-4924
Phone: (423) 472-5731

and

Bradley County
Soil Conservation District

EnSafe Inc.
5724 Summer Trees Drive
Memphis, Tennessee 38134
(901) 372-7962
(901) 372-2454 *fax*

EnSafe Project Number: 5300-001-03-000-00

www.ensafe.com | (800) 588-7962

a global professional services company.

1.0 CNMP SIGNATURE PAGE

Owner/Operator:	Charles Mason	
Address & Phone:	151 Sandidge Rd. SE Cleveland, TN 37323	(423) 476-4629
Farm and Tract No.	Farm 2716, Tract 2133	

The following people have assisted with the development of the CNMP and certify that their element meets all applicable NRCS standards.

Manure and Wastewater Handling and Storage

Signature:	
Name: RALPH SMITH	Date: 12/15/04
Title: NRCS ENGINEER	TN No.:

Nutrient Management

Signature: Helen M Brady	
Name: Helen M. Brady of EnSafe Inc.	Date: 11/29/04
Title: Project Manager	TN No.:

Land Treatment Practices

Signature: Helen M Brady	
Name: Helen M. Brady of EnSafe Inc.	Date: 11/29/04
Title: Project Manager	TN No.:

Certified Conservation Planner

As a Certified Conservation Planner, I certify that I have reviewed this plan and have determined that it contains the necessary elements as per the CNMP checklist. The planned components of the plan appear to be in conformance with NRCS standards and specifications and meet the soil and water Quality Criteria of Section III of the FOTG.

Signature: _____

CCP No.: _____ Date: _____

OWNER/OPERATOR

As the owner/operator, I certify that I, as the decision-maker, have been involved in the planning process and agree the items/practices listed in each element are needed. I understand that I am responsible for keeping all necessary records associated with the implementation of this CNMP. It is my intent to implement/accomplish this CNMP in a timely manner as described in the plan.

Signature: Charles L Mason Date: 12-29-10

RECEIVED
JAN 5 2011

RECEIVED
MAR 21 2011
TN Division Of Water Pollution Control

Table of Contents

1.0 CNMP SIGNATURE PAGE 1

2.0 LITTER VENDOR AGREEMENT 2

3.0 PURPOSE AND CONDITIONS OF THIS PLAN 3
- 3.1 Nitrogen and Phosphorus vs. Water Quality 3
- 3.2 Conditions 3
- 3.3 Utilization of Excess Litter 4
- 3.4 Goals 4

4.0 EMERGENCY RESPONSE PLAN 5
- 4.1 Helpful Hints to Avoid Fires 5
- 4.2 In Case of Catastrophic Loss 5
  - 4.2.1 General Information 5
  - 4.2.2 Composting 6
  - 4.2.3 Burial 7
  - 4.2.4 Site Approval 7
  - 4.2.5 Site Evaluation Criteria 7
  - 4.2.6 Burial Procedure 8
  - 4.2.7 Burning 8
- 4.3 Biosecurity 9
  - 4.3.1 How Diseases Spread 9
  - 4.3.2 10 Steps to Take to Avoid Disease Spread 9
- 4.4 Emergency Information 10

5.0 MAPS 11

6.0 CURRENT SYSTEM DESCRIPTION 16

7.0 LITTER STORAGE & MORTAILITY MANAGEMENT 17
- 7.1 Litter Generation 17
- 7.2 Storage 17
  - 7.2.1 Litter Facility Operation & Maintenance 18
- 7.3 Dead Animal Management 19
  - 7.3.1 Composting 19
  - 7.3.2 Composting Operation and Maintenance 20
- 7.4 Planned Practice and Facility Management Plan 22
- 7.5 Drawings & Construction Specifications 22

8.0 NUTRIENT MANAGEMENT 24
- 8.1 Soil Testing 24
- 8.2 P Index 25
- 8.3 Litter Testing 25
  - 8.3.1 Collecting the Sample 25
  - 8.3.2 Sample Transfer 26
- 8.4 Litter Application Plan 26
  - 8.4.1 Application Rates 26
  - 8.4.2 Commercial Fertilizer Application Equipment Calibration 26
  - 8.4.3 Litter Spreader Calibration 27

RECEIVED
MAR 21 2011
TN Division Of Water Pollution Control

RECEIVED
JAN 5 2011

Table of Contents Continued

8.4.4 Recommended Time of Application 28
8.5 Planned Nutrient Management Practices and Schedule 29
8.6 Operation and Maintenance 29

9.0 LAND TREATMENT PRACTICES 33

10.0 ODOR MANAGEMENT 35
10.1 Animal Cleanliness 35
10.2 Minimize Dust 35
10.3 Waste Storage Facility 35
10.4 Animal Diets 36
10.5 Proper Disposal of Mortality 36
10.6 Good Fly and Rodent Control Programs 36
10.7 Utilize Trees 36
10.8 Land Application 36

11.0 RECORD KEEPING 38
11.1 Record Keeping Requirements 38
11.2 Annual Report 39

12.0 LANDOWNER'S RESPONSIBILITY GUIDE 41

13.0 DRAWINGS & CONSTRUCTION SPECIFICATIONS 43

14.0 LITTER AND COMPOST TEST RESULTS 44

15.0 COPIES OF COMPLETED LITTER VENDOR AGREEMENT FORMS 45

16.0 RECORD KEEPING FORMS 46

List of Figures

Figure 1 Land Use Map 12
Figure 2 Location of Charles Mason Poultry Farm 13
Figure 3 Soil Survey Map 14
Figure 4 Topographic Map 15

RECEIVED
MAR 21 2011
TN Division Of Water Pollution Control

List of Tables

Table 1 Recommended Soil Testing Frequency 24
Table 2 Non-Application Buffer Widths 27
Table 3 Maximum Loading Rates 30

Checklists

CNMP CHECKLIST — Manure and Wastewater Handling And Storage Component 23
CNMP CHECKLIST — Nutrient Management Component 31
CNMP CHECKLIST — Land Treatment Component 34

RECEIVED
JAN 5 2011

3.0 PURPOSE AND CONDITIONS OF THIS PLAN

This Comprehensive Nutrient Management Plan (CNMP) is a conservation system for your animal feeding operation. It is designed to address, at a minimum, the soil erosion and water quality concerns on your operation. The following soil erosion and water quality concerns have been identified on your farm:

Soil Erosion Concerns	Water Quality Concerns	Other Concerns Addressed
None	Runoff from Litter (Storage)	Aesthetics
		Neighbor Relations
		Profitability
		Regulations

Litter and Nutrient Management is managing the source, rate, form, timing, placement and utilization of litter, other organic by-products, and other nutrients in the soil and residues. The goal is to effectively and efficiently use the nutrient resources to adequately supply soils and plants to produce food, forage, fiber, and cover while minimizing the transport of nutrients to ground and surface water and environmental degradation.

3.1 Nitrogen and Phosphorus vs. Water Quality

Nitrogen and phosphorus are the two nutrients most often identified as impairing the quality of our ground and surface water. Nitrogen leaching out of the root zone can enter tile and be transported to surface water or leach to ground water. The EPA Drinking Water Maximum Contaminant Level (MCL) for nitrate-nitrogen is 10 mg/L. Phosphorus leachate or runoff entering the surface water contributes to excessive algae growth causing low oxygen levels in surface water; this impairs aquatic life and contributes to bad tasting drinking water. This litter and nutrient management plan minimizes the transport of nitrogen and phosphorus to surface and groundwater.

3.2 Conditions

The Tennessee Department of Environment and Conservation (TDEC) acting under the authority of the Tennessee Water Quality Control Act of 1977 requires that animal byproducts (litter, feedlot or holding area runoff, milk house waste-water, silo drainage, etc.) be managed

RECEIVED
JAN 3 2011

so as not to enter the waters of the State. This Comprehensive Nutrient Management Plan provides the basic information on how the litter produced from my operation, will be land applied to crop fields and/or be utilized.

Note: If the number of livestock change (10% or more), fields change, or cropping sequence and rotation change, contact the NRCS field office or the person who prepared this CNMP for revisions.

3.3 Utilization of Excess Litter

If excess litter will be utilized on land not controlled by you an agreement shall be signed by the individual, broker, or group accepting the litter stating: THE CHICKEN LITTER WILL BE APPLIED TO LAND TO MEET THE MINIMUM "NRCS FIELD OFFICE TECHNICAL GUIDE" STANDARDS FOR WASTE UTILIZATION (633) AND NUTRIENT MANAGEMENT (590); OR HAVE A "NUTRIENT MANAGEMENT PLAN" (NMP) DEVELOPED ON THEIR LAND WITH NRCS or approved TECHNICAL SERVICE PROVIDER ASSISTANCE.

3.4 Goals

1. All litter and compost is removed from the farm.
2. Operate the farm in a socially and environmentally acceptable manner.

RECEIVED
JAN 6 2011

4.0 EMERGENCY RESPONSE PLAN

In Case of Fire, dial 911

4.1 Helpful Hints to Avoid Fires

Fires can develop in stacked poultry litter through spontaneous combustion. Special precautions should be taken to prevent this from happening.

- Pile height should not exceed 7 feet. Storing the material in separate small windrows reduces the cross sectional area and is the safest option for stacking.
- KEEP THE LITTER DRY! Do not wet the litter in the hope of preventing a fire; just the opposite may occur. In addition, protect the litter from blowing rain.
- Avoid placing the wet material in contact with dry material. Do not layer new litter on top of old, and do not let dead poultry compost come into contact with stored litter.
- Do not compact the material by driving over it or packing it with equipment.
- If litter is stored against wooden walls, limit the litter height to 4 feet.
- Monitor temperatures at different points in the pile frequently. If temperatures exceed 190°F, or if the material is smoldering, prepare to remove material from the building. This includes notifying the local fire department to be on hand. A smoldering pile could burst into flames if exposed to air. A garden hose could be inadequate to extinguish the fire.
- Do not store equipment in the litter storage structure.

4.2 In Case of Catastrophic Loss

4.2.1 General Information

Disposal by a rendering company should be the preferred method of carcass disposal in case of catastrophic loss. Disposal at a landfill may be an option in some locations. When these methods are not available, on-farm disposal will have to be considered.

On-farm methods include burial, composting, and burning. Of these 3 methods, composting is considered the most environmentally sound. When burying or composting, the disposal site should be evaluated for the following:

- Soil type

RECEIVED
JAN 8 2011

- Depth to bedrock
- Presence of fractured or cavernous bedrock
- Depth to seasonal high water table
- Flooding hazard
- Proximity to water bodies (rivers, streams, ponds, lakes, etc.)
- Proximity to wells
- Distance to public areas

If the potential exists for animals such as coyotes, dogs, possums, etc., to dig into the burial or composting site, either use more than two feet of material or use an appropriate fence to exclude these type animals.

4.2.2 Composting

Composting can be accomplished in windrows, bins made with large hay bales, or silage-type bunkers. Suitable bulking materials include chicken litter, sawdust, peanut hulls, straw, small wood chips, etc. Maximizing carcass contact with the bulking material will improve composting efficiency. Water may need to be added during the carcass and bulking material layering process when using dry bulking material.

The composting site should have a good vegetative filter around the pile for at least 20 feet. In sandy soils, prepare a compacted clayey pad at the composting location. Begin the composting process by placing 12 inches of bulking material on the ground.

Windrows

Windrow composting is best suited for small animal carcasses and may require specialized equipment to turn the compost for subsequent stages. The compacted clayey pad for windrowing should be approximately six feet wide. Place carcasses in one layer (three feet wide) and cover with an equal thickness of bulking material. Add additional layers to a total depth of about three feet above ground. Cover the windrow with a minimum of two feet of bulking material.

RECEIVED
JAN 5 2011

Hay Bale Bins

Place the bales end-to-end to form walls for three-sided enclosures. Excessively large bins should be avoided. A layout of two to three bales deep and three bales wide is the suggested size. Fill the bins with alternating layers of carcasses and bulking material. The carcasses should be one layer thick, and should be covered with an equal depth of bulking material. Cover the bin with a minimum of two feet of bulking material.

Silage-type Bunkers

Fill the bunker with alternating layers of carcasses and bulking material. The carcasses should be one layer thick, and should be covered with an equal depth of bulking material. Cover the bunker with a minimum of two feet of bulking material.

4.2.3 Burial

Note: Burial of animals is not permitted for day-to-day mortalities. Burial should be used only in emergencies or on occasion to dispose of a large animal.

4.2.4 Site Approval

Contact the local NRCS office for an on-site assessment to establish a suitable burial site. In the event of a massive die-off, notify the State Veterinarian for approval to use the burial site for disposal.

4.2.5 Site Evaluation Criteria

Dead animal burial sites should be:

- Located in suitable soils. There must be a minimum of 30-inches of suitable clayey soil cover over the carcass (soil map indicates possible suitable areas)
- Bottom of burial is two-feet above highest groundwater elevation
- At least 300 feet up gradient from any potable water source.
- At least 150 feet down gradient from any potable water source.
- At least 100 feet from a water body or stream or 100-year floodplain.
- A least greater than 500 feet from a residence

RECEIVED
JAN 5 2011

4.2.6 Burial Procedure

Burial sites are to be dug an appropriate depth for the specific soil and geologic conditions. The maximum size of the burial excavation should be 0.1 acre (about 4,400 sq. ft.). Multiple graves may be needed. For small animals (poultry, nursery pigs, etc.) place carcasses in a layer no thicker than one foot and cover each layer with at least one foot of soil. Carcasses of large animals (hogs, cattle, etc.) should be placed in one layer and covered with a minimum of two feet of soil. For deep soils (where bedrock is not a concern), carcasses and soil can be placed in multiple layers up to a total depth of eight feet.

The burial site should be mounded with a covering of at least two feet of soil, and surface water should be diverted away from the mound. The site should be vegetated immediately after completion to prevent erosion of the soil covering. Appropriate safety measures should be used during excavation and material placement. Excavations over 3.5 feet deep should be sloped on the sides at least 1.5 (horizontal) to 1 (vertical).

4.2.7 Burning

Burning is the least desirable method for disposing of catastrophic loss. As a last alternative burning the bodies of dead animals, including poultry, shall be done in accordance with TDEC Rule 1200-3-4-.04(f) and T.C.A. §§44-2-102(6), and where no other safe and/or practical disposal method exists.

RECEIVED
JAN 2011

4.3 Biosecurity

4.3.1 How Diseases Spread

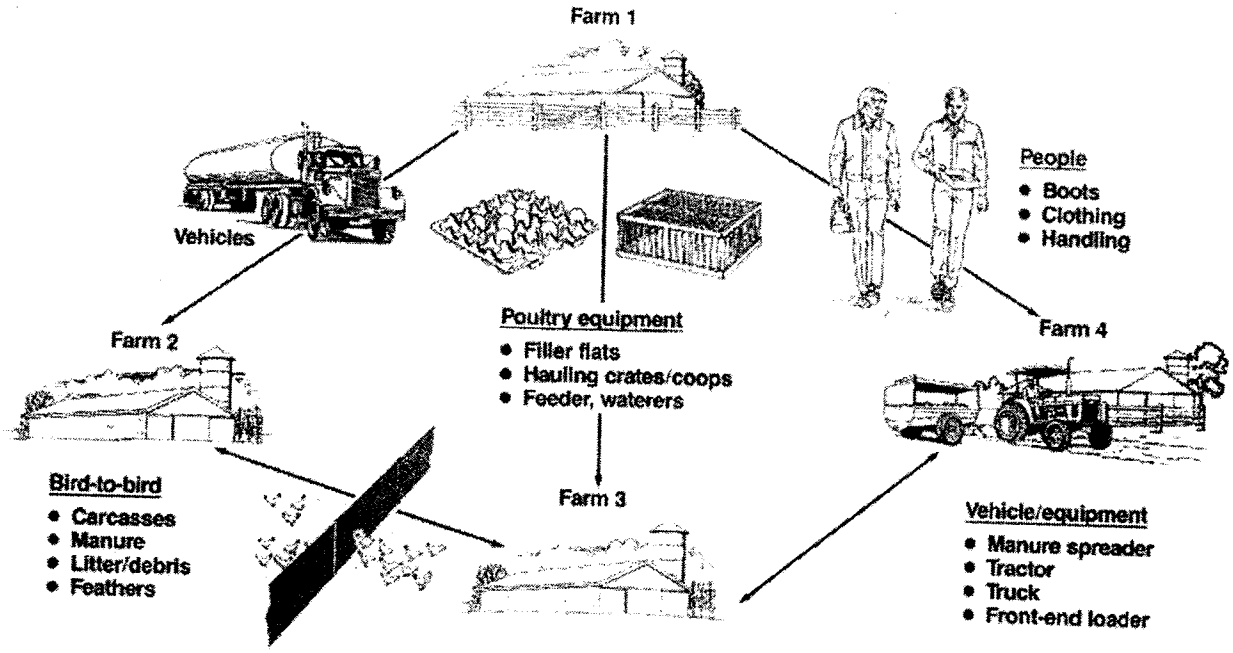

4.3.2 10 Steps to Take to Avoid Disease Spread

To reduce the risk of introducing disease into a flock, maintain a biosecurity barrier (physical barrier, personal hygiene, and equipment sanitation) between wildlife, poultry facilities, other commercial avian facilities, and pet birds. Some examples of good biosecurity practices include:

1. Permit only essential workers and vehicles on the premises.
2. Provide clean clothing and a disinfection procedure for employees and visitors.
3. Clean and disinfect vehicles at the farm entrance.
4. Avoid visiting other avian facilities.
5. Do not keep pet birds.
6. Protect the flock from exposure to wild birds.
7. Control movement associated with the disposal of bird carcasses, litter, and manure.
8. Quarantine new additions to the flock.
9. Never allow people or material to move from the quarantined birds to the flock.
10. Report signs of disease to your veterinarian.

RECEIVED
JAN 5 2011

4.4 Emergency Information

Farm Name	Charles Mason
Address	151 Sandidge Road SE Cleveland, TN 37323
Farm Phone	(423) 476-4692
Permit #	
Directions to Farm	From Cleveland, TN, take Hwy 74 south to Cedar Springs Road SE, then east to Cedar Springs Church Road SE, then south to Sandidge Road SE.

Emergency Phone Numbers	
Farm Owner	Charles Mason
Farm Manager	Same
Fire/Ambulance	911
Equipment:	None at present but plan to get tractor.

CONTACTS TO BE MADE WITHIN 24 HOURS	
TWRA	1-800-890-TENN (1-800-890-8366)
TDEC Environmental Assist. Center	1-888-891-8332 Chattanooga EAC: (423) 634-5745
Bradley County Health Dept.	423-728-7020
Tennessee One Call	1-800-351-1111
Bradley County Sheriff's Office	423-728-7300
TDOT	931-836-2619
State Veterinarian	615-837-5120

RECEIVED
JAN 5 2011

5.0 MAPS

Four maps are included with this plan: an aerial photograph with the farm and land use areas shown; the location of the farm in the county; the portion of the Bradley County soil survey map which corresponds with the farm location; and a topographic map with the farm location indicated.

The Mason farm is not within close proximity to creeks, and there are no wells on the property or nearby. No sinkholes or caves are on the farm. The farm is in the Conasauga watershed, HUC TN03150101. The primary soil type for Field 1 is Leadvale Silt Loam, and the primary soil type for Field 2 is Sequoia Silt Loam.

RECEIVED
2011

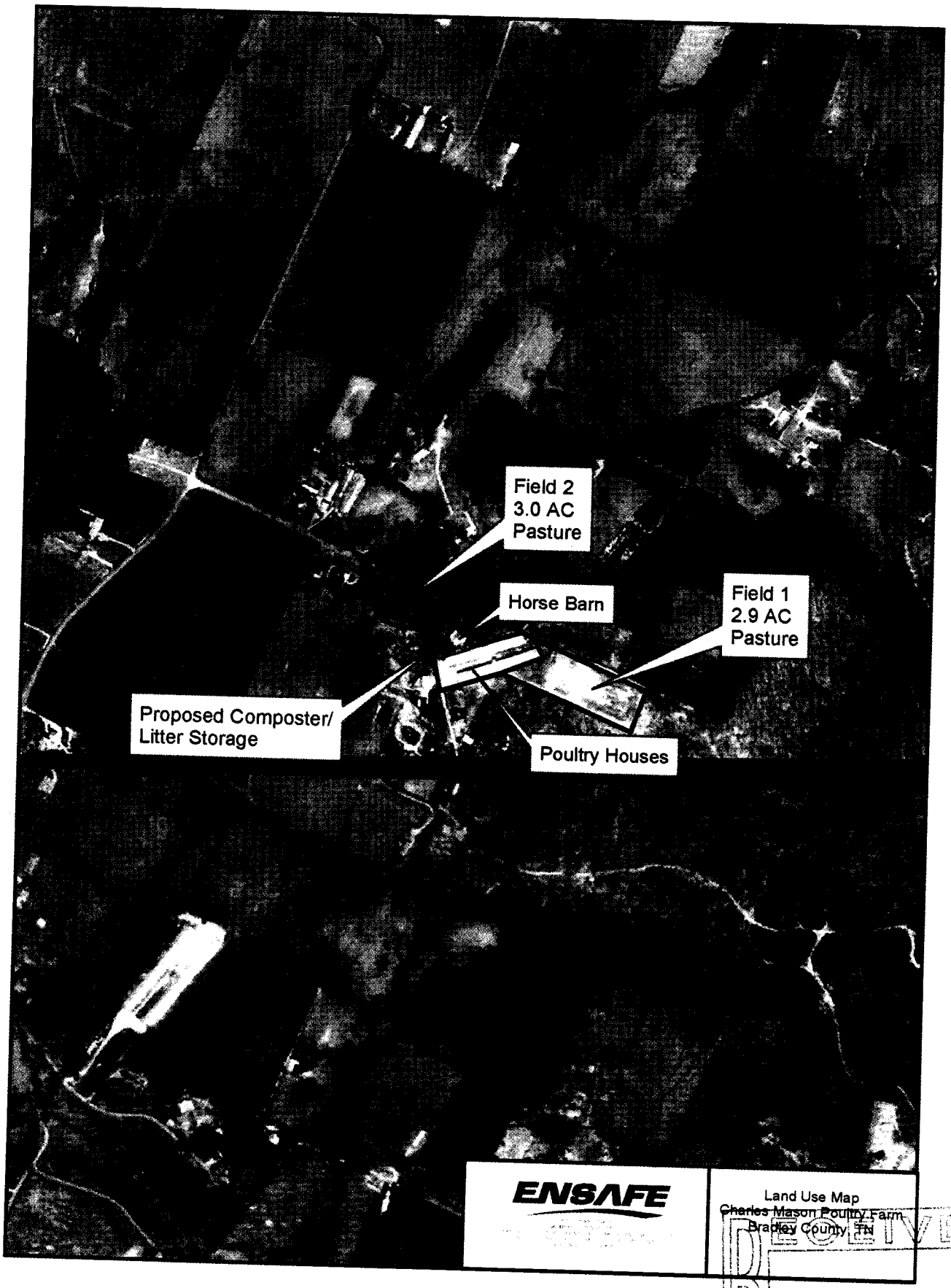

ENSAFE

Land Use Map
Charles Mason Poultry Farm
Bradley County, TN

RECEIVED
JAN 5 2011

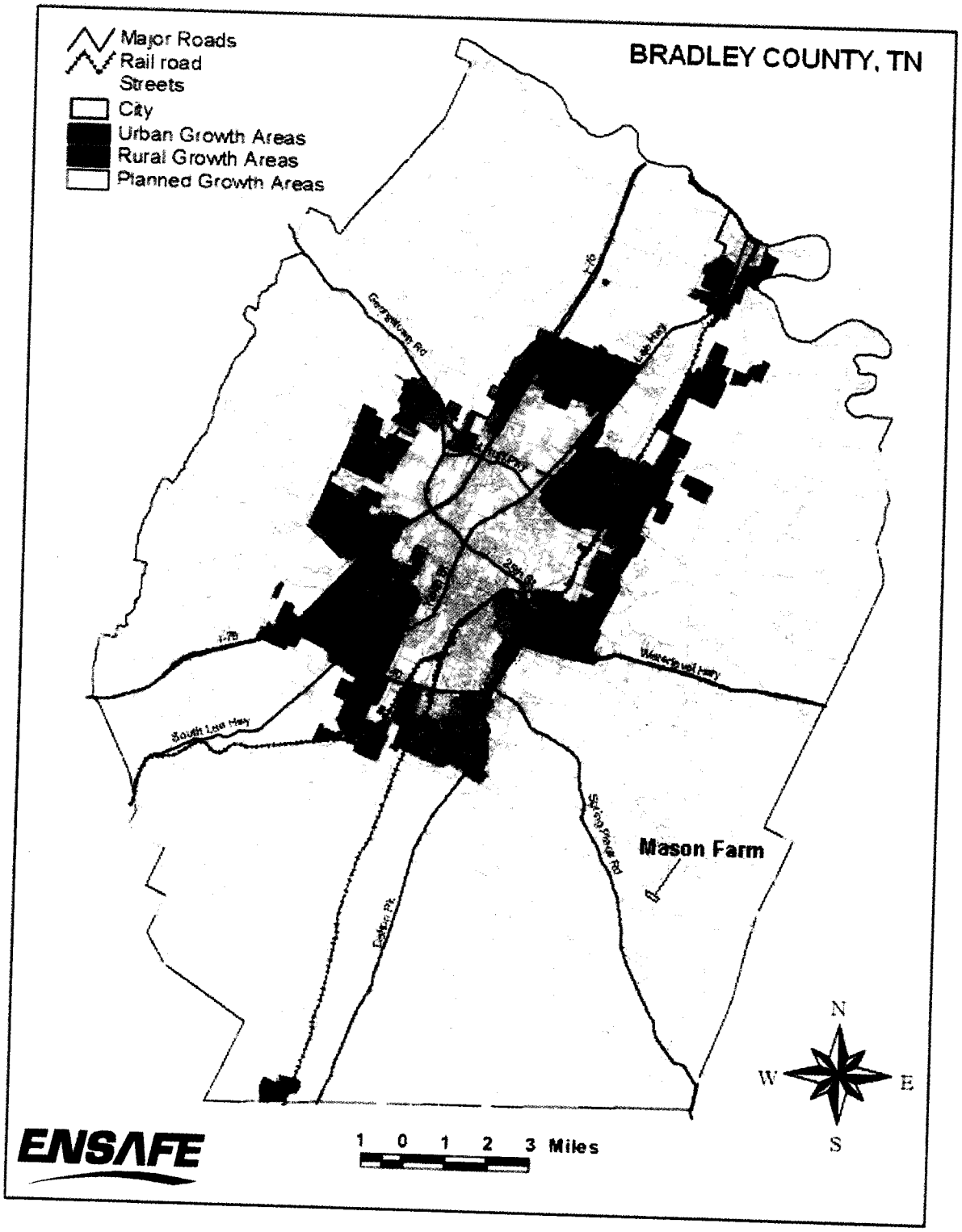

Figure 2 Location of Charles Mason Poultry Farm in Bradley County, TN

RECEIVED
JAN 5 2011

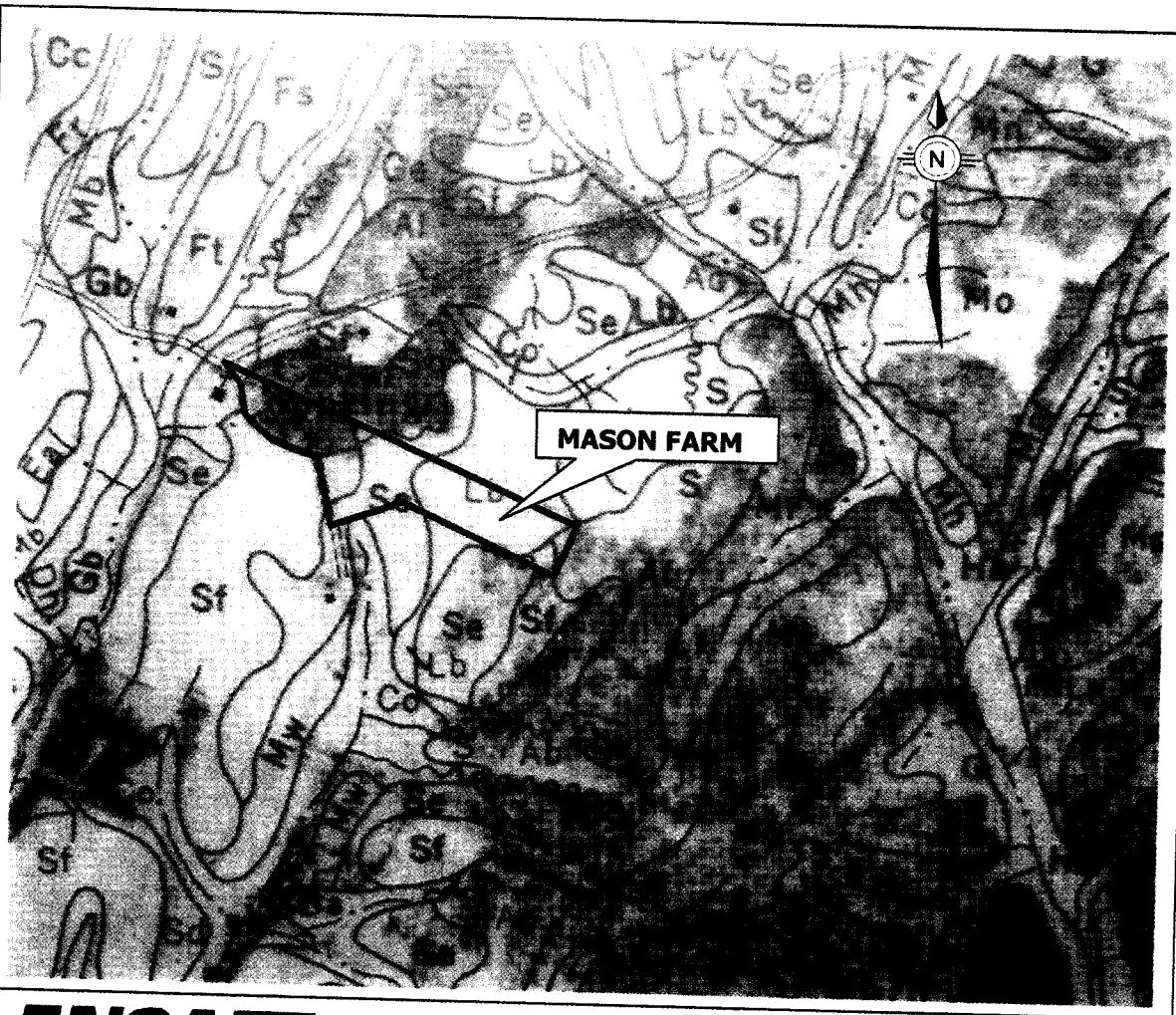

ENSAFE

Soil Survey Map
Charles Mason Poultry Farm
Bradley County, TN

Soil Legend
Lb – Leadvale Silt Loam, Eroded Undulating Phase, 2-5% slope
Sb – Sequoia Silt Loam, Rolling Phase, 5-12% slope
Sc – Sequoia Silt Loam, Undulating Phase, 2-5% slope
Se – Sequoia Silty Clay Loam, Eroded Rolling Phase, 5-12% slope
Sf – Sequoia Silty Clay Loam, Eroded Undulating Phase, 2-5% slope

Source: USDA/SCS Soil Survey, Bradley Co, 1951

NO SCALE

Figure 3 Soil Survey Map

RECEIVED
JAN 2011

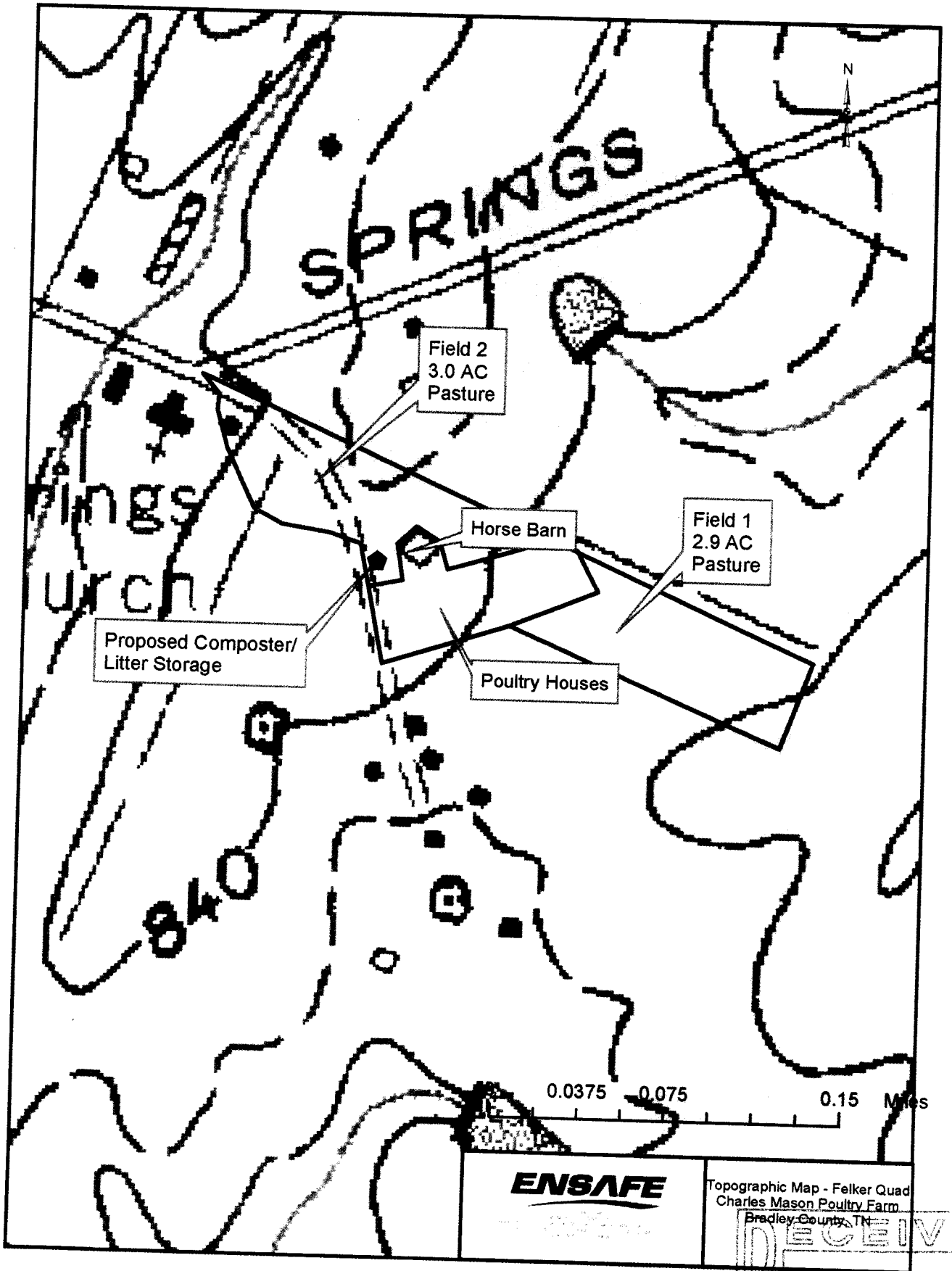

RECEIVED
JAN 5 2011

6.0 CURRENT SYSTEM DESCRIPTION

The following information describes the current operation:

This is a confined broiler operation. Two poultry houses each hold 23,000 broilers for a total of 46,000 broilers on the farm, with six grow outs per year. The landowner performs a partial cleanout (decake) after each grow out. The operation produces a maximum weight 4.5 pound bird, and has a mortality rate of 5 percent.

During decaking, the manure and contaminated bedding (litter) are removed from the houses, temporarily stored, and then taken off the farm for reuse at a mushroom plant. Mortality from the broiler operation will be composted in the planned composting facility and then removed from the farm with the litter.

The landowner has approximately 8 acres on his farm with approximately 5.9 acres used for pasture. The landowner uses the pasture to graze his three horses, two cows, and one donkey. No litter or compost will be applied on this farm.

The landowner plans to construct a composter and litter storage. A thirty (30) feet by forty-eight (48) feet waste storage structure for litter and compost is planned. See Section 13.0 — Drawings & Construction Specifications.

2011

Poultry System

Charles Mason

Wayne Coates

February 24, 2011

(This sheet generates nutrient values and volumes for poultry litter)

Poultry Type	Broiler (2.1 avg. weight)
Number of Birds	46,000
Method of Dead Bird Disposal	Composting
Mortality Rate	5.0 %
Flocks per Year	6.0 flocks per year
Pounds of Litter Produced/yr	579,600 lbs/yr
Volume of Litter Produced/yr	19,320 cu.ft./yr
Tons of Litter Produced/yr	290 tons/year
Tons of Litter sold or given away	
Tons of Litter Needed for Composting	
a. Dead Birds Produced	14 tons/year
b. Litter Needed	36 tons/year
Tons of Compost to Spread	43 tons/year
Tons of Litter/Compost to Spread	297 tons/year
Method of Storage & Cleanout	Broiler (stockpiled)
Nutrients Produced	18,414 lbs of N per yr
	16,038 lbs of P2O5 per yr
	18,592 lbs of K2O per yr
Nutrient Value of Litter/Compost	62 lbs of N per ton
	54 lbs of P2O5 per ton
	63 lbs of K2O per ton

7.2 STORAGE

Litter Storage Facilities used to store litter or perform composting shall be designed, constructed, installed, and maintained in accordance with NRCS conservation practice standard Waste Storage Facility (Code 313) and/or Composting Facility (Code 317). The litter storage facility is a 30 feet by48 feet and will store a complete cleanout from two grow-outs, or 8,256 cubic feet of litter, or approximately 100 tons of litter. The litter storage facility is designed for 120 days of storage (2 grow-outs)

RECEIVED
FEB 24 2011

If a litter storage facility is not installed and litter is stored outside, it must be covered with an opaque plastic or polyethylene sheeting having a minimum thickness of 6 mils, before rainfall occurs. Follow NRCS conservation practice standard: Waste Field Storage (Code 749).

7.2.1 Litter Facility Operation & Maintenance

1. Fires can develop in stacked poultry litter through spontaneous combustion. Special precautions should be taken to prevent this from happening.
   - Pile height should not exceed 7 feet. Storing the material in separate small windrows reduces the cross sectional area and is the safest option for stacking.
   - KEEP THE LITTER DRY! Do not wet the litter in the hope of preventing a fire; just the opposite may occur. In addition, protect the litter from blowing rain.
   - Avoid placing the wet material in contact with dry material. Do not layer new litter on top of old, and do not let dead poultry compost come into contact with stored litter.
   - Do not compact the material by driving over it or packing it with equipment.
   - If litter is stored against wooden walls, limit the litter height to 4 feet.
   - Monitor temperatures at different points in the pile frequently. If temperatures exceed 190°F, or if the material is smoldering, prepare to remove material from the building. This includes notifying the local fire department to be on hand. A smoldering pile could burst into flames if exposed to air. A garden hose could be inadequate to extinguish the fire.
   - Do not store equipment in the litter storage structure.
2. At least twice per year, when the facility is empty, inspect wooden parts, hardware, or other replaceable parts that are damaged or show excessive wear or decay.
3. All disturbed areas around the facilities should be vegetated or covered with gravel to prevent erosion.
4. In the event of catastrophic loss, follow Section 4 — Emergency Response Plan.

RECEIVED
JAN 5 2011

7.3 Dead Animal Management

Dead animals will be disposed of according to state or local laws and in a way that does not adversely affect ground or surface water or create public health concerns. The mortality will be composted.

Burial will be employed as a secondary means of mortality disposal. A site has been selected that meets the following criteria:

- can provide a minimum of 30-inches of suitable clayey soil cover over the carcass
- bottom of burial is two-feet above highest groundwater elevation
- it is greater than 100 feet away from private well
- it is greater than 200 feet away from public well
- it is greater than 50 feet from an adjacent property line
- it is greater than 500 feet from a residence
- and it is greater than 100 feet from a stream, lake, pond, wetland, or 100-year floodplain.

The burials will be limited to equivalent of 1500 5-pound animals per acre per year.

7.3.1 Composting

Based on a 5 percent mortality rate (farm records) for the operation, approximately 14 tons of dead birds will be composted in a year. Litter will be the primary ingredient in the compost recipe. Approximately 36 tons (2.5 x tons of dead birds) of litter will remain on site and be used in the composting process. The dead birds will be composted in two stages. A total of 518 cubic feet of area is needed to compost one grow out. The composter is designed for 630 cubic feet of primary composting area, and 630 cubic feet of secondary composting area. Therefore, the composter can store material composted from two grow outs for 120 days.

For proper composting, correct proportions of carbon, nitrogen, moisture, and oxygen need to be present in the mix. Carbon sources that could be used are peanut hulls, cottonseed hulls, sawdust, leaves, etc. In most cases litter (manure, urine, and carbon bedding source) alone can be used to compost mortalities as long as desirable C: N ratio (20 to 35:1), bulking ability and moisture content are present. Moisture management is critical and must be maintained

RECEIVED
JAN 5 2011

between 40 and 60 percent (40% — does not leave your hand moist when squeezed, 60% — if more than two drops drip from your hand the material is too moist). The entire process for two-stage composting without forced aeration normally takes about 20 days, but may vary up to 30 days depending on the mix and proportion of ingredients.

Monitoring Temperature

The best indicator of proper composting is temperature. After the pile is capped, wait 11 to 14 days before turning the mix. During this first stage of the composting, the temperatures in the mixture should rise to 130 to 150 degrees F. If the temperature falls below 120 degrees F or rises above 180 degrees F, the compost should be aerated or mixed immediately. When the temperature falls below 130 degrees F in first stage bin, turn the pile into a second stage-composting bin. Temperatures will rise once again to the 130 to 150 degree range. After approximately 7 days, the compost should be ready for spreading.

7.3.2 Composting Operation and Maintenance

1. Monitor the temperature of the composting pile with a long stemmed stainless steel thermometer. Temperature of the compost will reach 130 to 150 degrees F if composting properly. If temperature rises above 180 degrees F, remove the compost and spread it in a uniform 6-inch layer away from the building for cooling. If the temperature never rises above 130 degrees, incorporate the compost into the soil immediately or re-compost by turning and adding moisture as needed.

2. Compost layering method.
   a. The first layer is one foot of litter.
   b. (Optional) A 4 inch fluffed layer of straw is added according to the recipe.
   c. A layer of carcasses is added. Carcasses placed directly on dirt or concrete floors, or against bin walls will **not** compost properly.
   d. Add water if needed (uniform spray).
   e. Cover carcasses with 6-inch layer of litter.
   f. Begin next layer of carcasses with straw and repeat above steps.

JAN 2011

g. When composter is full, cap with 4 additional inches.

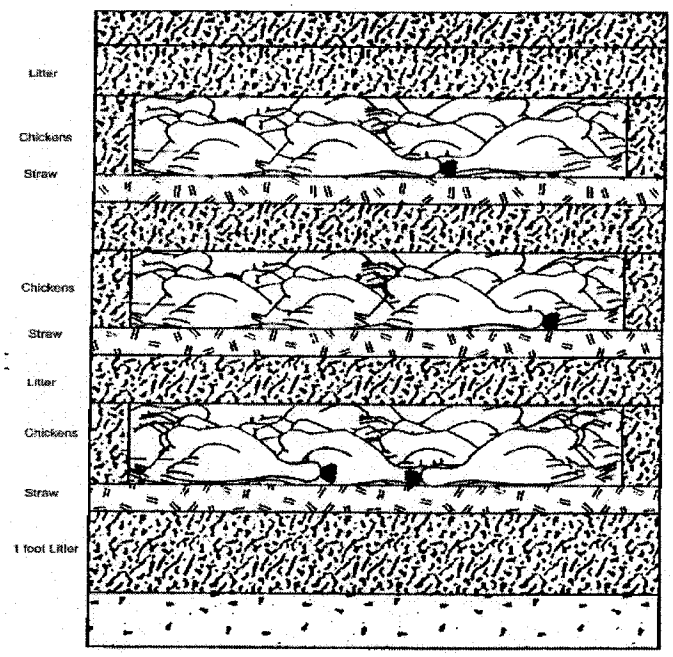

3. Maintain the moisture content at 40 to 60 percent during the composting process (40% — does not leave your hand moist when squeezed, 60% - if more than two drops drip from your hand the material is too moist, therefore add sawdust or dry carbon source).

4. Finished compost may be stored outside if protected from rain with suitable cover.

5. Replace deteriorated or broken wood or hardware, repair roofs, and patch concrete floor as necessary.

RECEIVED
JAN 5 2011

7.4 Planned Practice and Facility Management Plan

Planned Practice and Facility Management Plan	Amount	Year of Installation
Waste Storage Facility (633) Install a facility to store litter during non-application periods. • Waste storage plans will be developed to properly store litter until land application can occur.	1	2005
Composting Facility (317) • A **composter** shall be used to safely dispose of animal mortalities. Composted material will be temporarily stored in the composting facility until land application can occur.	1	2005

7.5 Drawings & Construction Specifications

(See Section 13 — Drawings & Construction Specification)

All new and existing structures will meet NRCS standards and specifications. Measures will be taken during construction to minimize erosion and pollution of downstream water resources. This may include details and specifications for such items as silt fences, hay bale barriers, temporary vegetation, mulching, etc.

RECEIVED
JAN 5 2011

CNMP CHECKLIST – Manure and Wastewater Handling And Storage Component

✓ 1. Narrative describing current and planned processes for collection, storage, treatment and transfer of manure and waster water. If milk house waste is stored, transferred or treated separately, identify this process and all components such as settling trap, grease trap, pump station and storage or treatment type, as applicable.

✓ 2. Narrative describing current and planned processes for disposing of dead animals, animal medical wastes, spoiled feed, and any other potential contaminants to insure compliance with federal, state and local laws and regulations.

✓ 3. Documentation of types of animals and production phases (broilers, layers, etc.) and numbers of each type. Also document average weights of each animal type and the period of confinement for each type of animal.

✓ 4. Document total estimated manure and waste water volumes produced at the facility. For a new facility estimate these volumes using procedures and tabular data provided in the NRCS Agricultural Waste Management Field Handbook (AWMFH), Chapter 4, "Waste Characteristics".

✓ 5. Identify manure storage type, volume, and length of storage. If more than one storage is planned, give this information for each storage. (i.e. Manure storage, solids settling tank, filter strip flush tank, etc.).

✓ 6. Identify existing transfer equipment, system and procedures, as well as those that are planned, if different from existing scenario.

✓ 7. Include a copy of the Operation and Maintenance (O&M) plan for all facilities and maintenance activities that address collection, storage, treatment and transfer of manure and waste water, including associated equipment, facilities and structures.

✓ 8. Document nutrient content and volume of any and all manure that will be transferred to others off of the farm.

✓ 9. Include an emergency response plan to address any potential spills and catastrophic events.

✓ 10. Include any additional considerations addressing air quality issues or concerns.

✓ 11. Include any additional considerations addressing pathogen issues or concerns.

Note: Check or initial each item when complete. Enter NA where not applicable.

RECEIVED
JAN 2011

8.0 NUTRIENT MANAGEMENT

Nutrients (Litter, Wastewater, and Commercial Fertilizers)

8.1 Soil Testing

Soil testing should occur as recommended in Table 1. Soil nutrient levels should be monitored by soil testing to determine the requirement or buildup of phosphorus and potassium in the soil. As a minimum, the soil test analysis is to include pH, phosphorus, and potassium.

Soil samples are to be collected in accordance with The University of Tennessee extension service guidance (PB1061 available at http://www.utextension.utk.edu/pbfiles/PB1061.pdf) or standard industry practice if accepted by The University of Tennessee.

Soil testing is to be performed by laboratories that are accepted in one or more of the following programs:

- State Certified Programs
- The North American Proficiency Testing Program (Soil Science Society of America)
- Other laboratories whose test results and interpretations of such test are within the currently accepted guidelines of The University of Tennessee

Soil profile sampling for nitrogen, Pre-Sidedress Nitrogen Test (PSNT) (UT SP427 for corn), Pre-Plant Soil Nitrate (PPSN) or soil surface sampling for phosphorus or acidity may be necessary in situations where there are special production or environmental concerns.

Soil amendments shall be applied to adjust pH to specific range of the crop for optimum utilization of nutrients as per soil test recommendations

Table 1 — Recommended Soil Testing Frequency

Landuse	Frequency (years)
Continuous row crops (conventional)	2-3
Double-cropping system	2
Continuous No-till Corn, Cotton, Tobacco	1-2
Continuous No-till Soybeans (only)	3-5
Hay Systems	2

RECEIVED
JAN 5 2011

Table 1 — Recommended Soil Testing Frequency	
Landuse	**Frequency (years)**
Pasture	3-5
High value Cash Crops (tobacco, vegetables)	annually
Lawns, Gardens	3-5
Any time a nutrient problem is suspected	Per event
At the beginning of a different cropping rotation	Per event

8.2 P Index

When the soil test report recommends no application of P_2O_5 to the crop and a nitrogen-based application rate is needed, the Tennessee Phosphorus Index (P Index) is used to assess further applications of P_2O_5. The P Index is an assessment tool used to evaluate the potential for P movement from the land application area. **No P Index was run on this farm because no litter or compost will be applied here.**

8.3 Litter Testing

Nutrient testing of litter and compost will need to be done on a yearly basis. Application rates will be adjusted as appropriate. All litter and compost test results should be located in Section 14.

8.3.1 Collecting the Sample

When collecting a manure sample from a storage facility, the most important thing to keep in mind is to collect a sample representative of what will be land applied to the crop. If a livestock operation has more than one storage facility (e.g. litter storage and a composter) each unit should be sampled separately (e.g. the producer will need to collect two samples, one to represent each manure type, liquid sample and a solid sample).

The sample sent to the lab from a litter storage facility and/or composter should be a composite of several sub-samples. Sub-samples should be obtained from about 10 locations within the facility. The sample locations should vary by depth (from 1 ft deep to 3 inches from the bottom) and by position (from the front, back and sides). After collecting the sub-samples, the material should be mixed in one container to make a homogeneous composite sample. The composite sample sent to the lab should be about one pint. It should be sent in a well-sealed container.

RECEIVED JAN 2011

Sealable plastic bags work well for relatively dry material, wide mouthed plastic bottles are better for wetter material. Manure sampling should follow this same procedure when litter is removed from poultry barns and directly applied to land, taking sub-samples during the removal process.

8.3.2 Sample Transfer

The sample should be mailed or delivered to the lab the day of collection to reduce sample degradation with time. Do not send samples that will not be delivered within one to two business days. For example, do not send on a Thursday and allow it to set in the post office or mail-box during a weekend. The sample should be analyzed for total nitrogen, ammonical nitrogen, phosphorus, potassium and total solids. Contact the lab prior to sending in a sample to receive a sample analysis form to mail in with your sample.

8.4 Litter Application Plan

Where to Apply	When to Apply	On What Crops	Amount to apply*
NO LITTER OR COMPOST WILL BE APPLIED TO THIS FARM			

8.4.1 Application Rates

No litter and/or compost will be applied to this farm.

Commercial fertilizer applied on this farm will be land applied according to the recommendation provided by a soil test.

8.4.2 Commercial Fertilizer Application Equipment Calibration

The nitrogen applicator, the commercial broadcast spreaders, and corn planter will be set per the manufacturers recommendations, then filled with a known amount and checked over known acreage. Adjustments will be made to achieve the planned rates.

RECEIVED
JAN 2011

8.4.3 Litter Spreader Calibration

There are several methods that can be used to calibrate the application rate of a spreader. It is desirable to repeat the calibration procedure 2 to 3 times and average the results to a more accurate calibration.

Before calibrating the spreader, the spreader settings such as splash plates should be adjusted so that the spread is uniform. Most spreaders tend to deposit more litter near the spreader than at the edge of the spread pattern. Overlapping can make the overall application more uniform. Calibration of application rates when overlapping requires measuring the width of two spreads and dividing by two to get the effective spread width.

Calibration should take place annually or whenever litter is being applied from a different source or is of a different consistency.

<u>No litter or compost will be applied to this farm.</u>

Table 2 — Non-Application Buffer Widths

Object, Site	Situation	Buffer Width *(ft.)* from Object, Site
Well	Located up-slope of application site	150
Well	Located down-slope of application site provided conditions warrant application	300
Waterbody or Stream[1]	Predominate slope < 5% with good vegetation[2/]	30
Waterbody or Stream[1]	Predominate slope 5-8% with good vegetation[2/]	50
Waterbody or Stream[1]	Poor vegetative cover or Predominate slope > 8%[2/]	100
Waterbody or Stream[1]	Cultivated land, low erosion	30
Public Road	Irrigated wastewater	50
Public Road	Solids applied with spreader truck	50
Dwelling	Other than Producer	300
Public Use Area	All	300
Property Line	Located downslope of application site	30

[1] Waterbody includes pond, lake, wetland, or sinkhole. "Open" sinkholes should be protected the same as a well. Where sinkholes are not "open", a buffer width should be established in the flat area around the rim of the basin before the change in slope up out of the basin begins. Stream includes both perennial and intermittent streams.
[2] Good vegetation refers to a well-managed, dense stand that is not overgrazed.

8.4.4 Recommended Time of Application

No litter or compost will be applied on this farm. A key component of land application is timing. Litter and other nutrients must be applied as close to planting as possible or when the crop is actively growing in such a way as to prevent it from entering streams, other water bodies, and environmentally sensitive areas. Timing is indicated in the following table. Nutrients can not be applied in December, January, or February.

	MONTH											
CROP	**Jan**	**Feb**	**Mar**	**Apr**	**May**	**June**	**July**	**Aug**	**Sept**	**Oct**	**Nov**	**Dec**
Small Grains			●	●						●	●	
Soybeans			●	●	●	●						
Soybeans/Wheat Double Crop			●	●	●	●			●	●	●	
Corn Grain			●	●	●	●						
Corn or Sorghum Silage			●	●	●	●						
Grain Sorghum			●	●	●	●						
Cotton			●	●								
Pine Trees			●	●	●	●	●	●	●			
Hardwood Trees				●	●	●	●	●	●			
Fescue/Pasture/Hay			●	●	●	●			●	●	●	
Bermuda grass Pasture/Hay					●	●	●	●				
Bermuda grass/Fescue 50/50 Mix			●	●	●	●	●	●	●	●	●	
Orchard grass Pasture/Hay			●	●	●	●			●	●	●	
Other Cool Season Mix Pasture/Hay			●	●	●	●			●	●	●	

RECEIVED JAN 2011

8.5 Planned Nutrient Management Practices and Schedule

Planned Nutrient Management Practices and Schedule	Field	Units	Date Planned
Nutrient Management (590) Manage the amount, form, placement and timing of plant nutrient application on these fields in accordance with these plans.	No litter or compost will be applied on this farm.		
Waste Utilization (633) Use organic waste material in an environmentally safe manner to enrich soil fertility in accordance with Nutrient Management (590). Test litter and compost materials annually to determine nutrient value.	No litter or compost will be applied on this farm.		

8.6 Operation and Maintenance

1. Do not apply nutrients in December, January, or February unless following University fertilizer recommendation for specific crops.
2. If the crop, method of application, feed ration or consistency of litter/compost changes, it will be necessary to re-calculate an appropriate application amount.
3. Nutrients from any source shall not be applied on saturated, frozen and/or snow-covered soil.
4. Nutrients will not be spread in an established waterway or any defined drainage way that carries concentrated flow. Litter/compost may be applied to newly constructed grass waterways if incorporated immediately.
5. Litter/compost can not be applied on land that is subject to frequent flooding unless the litter or compost is incorporated immediately.
6. Nutrients can not be applied when imminent rain is expected.
7. Incorporating litter or compost into the soil versus surface application can reduce odors.
8. Soil profile sampling for nitrogen when corn is knee high. Follow Pre-Sidedress Nitrogen Test (PSNT) (UT SP427 for corn),
9. Equipment shall be calibrated to ensure uniform distribution of litter at recommended rates. Follow UT SP414 for information when calibrating spreader equipment.
10. Non-application buffer widths will be maintained around fields receiving litter and compost. Table 2 contains guidance for maintaining non-application buffer widths.
11. Avoid unnecessary contact with chemical fertilizers and organic byproducts. Wear protective clothing when working with plant nutrients. Extra caution should be taken

RECEIVED JAN 2011

when handling ammonia sources of nutrients, or when dealing with organic wastes in stored or unventilated enclosures.

12. Vehicles used to transport litter or compost on State or Federally maintained roads will be covered when the hauling distance is greater than one mile.
13. When litter is removed from the chicken houses, it should be applied directly to the field or if dry enough, stockpiled and covered with plastic or stored in roofed storage facility.
14. Fields receiving nutrients should be soil tested at least every 2 or 3 years or according to Table 1.
15. Maintain records of where nutrients are applied.
16. When litter/compost are applied, the accumulation of potential pollutants (including arsenic, cadmium, copper, lead, mercury, selenium, and zinc) in the soil shall be monitored in accordance with the US Code, Reference 40 CFR, Parts 403 and 503, and/or any applicable state and local laws or regulations. Table 3 contains maximum allowable yearly and cumulative application amounts.

Table 3 — Maximum Loading Rates

	Maximum Site Application			
	Cumulative Total		Yearly Rate	
Metal	**lbs/ac**	**(kg/ha)**	**lbs/ac**	**(kg/ha)**
Arsenic	37	(41)	2.2	(2.0)
Cadmium	34.8	(39)	1.7	(1.9)
Copper	1,340	(1,500)	67	(75)
Lead	268	(300)	13.4	(15)
Mercury	15.2	(17)	0.76	(0.85)
Nickel	375	(420)	18.75	(21)
Selenium	89.3	(100)	4.47	(5.0)
Zinc	2,500	(2,800)	125	(140)

2011

CNMP CHECKLIST – Nutrient Management Component

✓ 1. Producer name, address, county, phone number, email. Planner's name, address, phone number, email. Date plan prepared and crop year of plan.

✓ 2. Narrative describing the farm enterprise: farm manager, type of operation, animal units (types, number, and weight of each animal and period of confinement), acreage (rented and owned), business objectives/plan, watershed, watershed code, and watershed concerns.

✓ 3. Local proximity map such as a highway map showing farmstead, tracts and watercourses.

✓ 4. Aerial site photographs or maps with boundaries of fields and marked setbacks and buffers. Soil map, soil descriptions. Maps should have appropriate map symbols and legends including a title block with:

- ✓ a) Landowner/operator
- ✓ b) Prepared with assistance from EnSafe Inc.
- ✓ c) Scale of the map
- ✓ d) Date prepared
- ✓ e) North Arrow
- ✓ f) Name of the County
- ✓ g) District and State

✓ 5. The following have been identified for all crop fields:

- ✓ h) Primary soil type
- N/A i) Crop rotations and year in rotation (e.g. C2 of C3H5)
- N/A j) Type, timing, depth, and sequence of tillage
- N/A k) Description of crop residue use

✓ 6. Topographic map with appropriate legend

✓ 7. Location of designated environmentally sensitive areas or resources, such as sinkholes, streams, springs, lakes, ponds, wells, gullies, tile inlets areas of concentrated flow and drinking water sources.

✓ 8. Farm Service Agency (FSA) designation for Tracts and Fields, along with FSA acreage.

✓ 9. Landowner/operator field identification codes and whether land is owned or rented.

✓ 10. Landuse designation (hayland, cropland, pasture, etc.).

✓ 11. Current and/or planned plant production sequence or crop rotation.

RECEIVED
JAN 5 2011

N/A 12. All fields have recent soil tests (within 3 yr.) and the soil lab and extraction methods have been identified.

N/A 13. Annual manure test results from each storage containment.

✓ 14. Estimation of manure production including bedding, milk center, and barnyard runoff, if applicable.

N/A 15. All Manure/Waste application equipment has been described, sized and calibrated.

N/A 16. Manure/waste produced in relation to available or spreadable acres has been assessed.

✓ 17. Manure storage type, volume, and length of storage.

N/A 18. A complete nutrient budget for nitrogen, phosphorus, and potassium for the plant production system that includes all potential sources of nutrients.

N/A 19. Realistic yield goals and a description of how they were determined.

N/A 20. Recommended nutrient application rates by field including the form, source, amount, timing (month and year) and method of application of nutrients (manure and commercial fertilizer).

N/A 21. Manure/Waste spreading schedule has been developed.

✓ 22. If excess nutrients exist, decisions have been made, or alternatives presented for off-farm use of the manure and appropriate documentation provided.

N/A 23. Risk assessments for potential phosphorous transport from fields are made and recommended BMPs to treat the concerns are indicated.

✓ 24. Plan has been checked for cross-compliance with all applicable Federal programs (Food Security Act-HEL and Wetland Conservation) and State regulations (AAPs).

✓ 25. Guidance for implementation, operation, maintenance, and record keeping.

Note: Check or initial each item when complete. Enter NA where not applicable.

RECEIVED
JAN 2011

9.0 LAND TREATMENT PRACTICES

Sites Proposed for Land Application — None on this Farm

Fields where nutrients are applied will be managed to soil loss tolerance and in accordance with a Conservation Plan developed under the direction of a Certified Conservation Planner. The soil loss on fields on this farm is within soil loss tolerance due to the landuse being dedicated to forages. Following are planned practices for the CNMP for this farm.

Planned Land Treatment Practices and Schedule	Field	Units	Date Planned
No litter or compost will be applied on this farm.			

CNMP CHECKLIST — Land Treatment Component

✓ 1. Narrative describing on-site visit identifying potential natural resource concerns, problems, and opportunities for the conservation treatment unit.

N/A 2. Identification of the potential for Nitrogen and Phosphorus losses from the site.

N/A 3. Documentation that NRCS Quality Criteria for Water Quality, found in Section III of the FOTG has been met.

N/A 4. Documentation that soil erosion has been addressed to reduce the transport of manure nutrients within or off of a field to which manure is applied. (If planned to "T", RUSLE documentation will meet this requirement. Otherwise, a narrative explaining how the reduction will occur.)

✓ 5. Identify NRCS Conservation Practice Standards, and code numbers that will be used as part of a conservation system to minimize runoff and soil erosion.

✓ 6. Identify federal, state and local laws and regulations that are not being met and how compliance will be attained, as applicable.

✓ 7. Identify the following on an aerial photo:

- N/A a. Land application areas.
- N/A b. Individual fields with setbacks, buffers, waterways and other planned conservation practices.
- ✓ c. Sensitive areas such as sink holes, streams, springs, lakes, ponds, wells, gullies, and drinking water sources.
- ✓ d. Other site information features of significance such as property lines.

✓ 8. Include soils map and soils information such as features, limitations, and capability for each field.

✓ 9. Identify operation and maintenance (O&M) practices and activities for all conservation practices.

Note: Check or initial each item when completed. If not easily identifiable, note where it can be found. Enter NA where not applicable.

RECEIVED
JAN 2011

10.0 ODOR MANAGEMENT

It may not be practical or feasible to eliminate all odor emissions from the operation, but it is possible to manage or mitigate the odor. Some variables that affect odor are:

- Type of operation
- Ventilation method
- Animal diets
- Season
- Management skill or effort
- Building design
- Animal numbers
- Litter treatment system
- Topography

10.1 Animal Cleanliness

a. Clean, dry, and healthy animals are less odorous. Dirty, litter-covered animals promote accelerated bacterial growth and the production of odorous gases.

b. Animal stress can also be correlated to an increase in odor production. Ventilation and environmental controls for the buildings must be properly designed and maintained to keep the animals healthy.

10.2 Minimize Dust

a. It has been established that there is a correlation between dust and odor emission. Dust particles adsorb and concentrate odorous compounds. As the dust particles are carried by the wind, so is the odor.

b. Therefore, minimizing dust will reduce odor. Most farm dust comes from feed, fecal matter and, in the case of poultry, from feathers and litter. Dust also comes from animal skin, insects, and other sources.

c. Buildings should be cleaned of all dust between batches of animals (including fans, shutters, and screens).

10.3 Waste Storage Facility

Waste Storage Facility is to reduce emissions of greenhouse gases, ammonia, volatile organic compounds, and odor.

Consider alternatives and additional practices including covered anaerobic digesters (365), and composting facilities (317).

Adjusting pH below 7 may reduce ammonia emissions from the waste storage facility but may increase odor when waste is surface applied.

10.4 Animal Diets

Animal diets can also be manipulated to produce less waste and a less odorous waste.

10.5 Proper Disposal of Mortality

Normal mortality for the animal feeding operation must be properly handled for both odor control and biological security of the operation. Composting, incineration, and rendering are acceptable methods for mortality disposal.

10.6 Good Fly and Rodent Control Programs

These programs must be a continuous process on the farm. When feed and waste products are properly handled, these problems are minimized.

10.7 Utilize Trees

While trees should not grow directly adjacent to facilities, wind breaks of trees correctly positioned near the facility not only create a visual barrier but can also provide a large filtration surface for dust and odorous compound removal. Trees can adsorb odorous compounds and create turbulence that enhances odor dispersion and dilution. Trees also can create a cooler microclimate around the facility, which can reduce odors.

10.8 Land Application

a. Note wind direction and avoid spreading when the wind is blowing toward populated areas.

b. Avoid spreading on weekend/holidays when people are likely to be engaged in nearby outdoor and recreational activities.

c. Spread in the morning when air begins to warm and is rising, rather than in the afternoon.

d. Use available weather information to best advantage. Turbulent breezes will dissipate and dilute odors. Hot and humid weather tends to concentrate and intensity odors, particularly in the absence of breezes. Rain will remove the odor from the atmosphere.

e. Use natural vegetation barriers, such as woodlots or windbreaks, to help dissipate and filter odors.

f. Establish vegetated air filters in field border area by planting conifers and shrubs as windbreaks and visual screens between cropland and residential developments.

JAN 2011

11.0 RECORD KEEPING

11.1 Record Keeping Requirements

The following records shall be retained and available for inspection, upon request by the TDEC commissioner, an agent of TDEC or the EPA, for five years:

a. A copy of the CAFO's site-specific Comprehensive Nutrient Management Plan;

b. Documenting the following visual inspections;
   1. Weekly inspections of all storm water diversion devices, runoff diversion structures and litter and compost storage structures.
   2. Daily inspections of water lines, including drinking or cooling water lines, and
   3. Weekly inspection of the litter and compost structures noting the litter/compost levels in each structure;

c. Documenting any corrective actions taken (if deficiencies are not corrected within 30 days of notice of deficiency, the records must include an explanation of the factors preventing immediate correction);

d. Records of mortalities management and practices used to comply with the nutrient management plan;

e. Records documenting the current design of any litter storage or compost structures, including total design volume and approximate number of days of storage capacity;

f. Records of the date, time, and estimated volume of any overflow, including how the overflow was handled (i.e. litter was covered with 6 mil plastic within 1 hour of completing the pile);

g. If alum is used, the amount and type of alum, date alum was applied;

h. Expected and actual crop yields;

i. Date(s) litter or compost is applied to each field;

j. Weather conditions at the time of application and for 24 hours prior to and following application;

k. Test methods used to sample and analyze litter, compost and soil;

l. Results from litter, compost and soil sampling;

m. Explanation of the basis for determining manure application rates, as provided in the technical standards established by the NRCS or as otherwise approved by the TDEC director or the Tennessee Department of Agriculture;

JAN 2011

n. Calculations showing the total nitrogen and phosphorus to be applied to each field, including sources other than litter or compost;

o. Total amount of nitrogen and phosphorus actually applied to each field, including documentation of calculations for the total amount applied;

p. The method used to apply the litter or compost; date(s) of application equipment inspection and calibration, and

q. The date, recipient name and address, and approximate amount of litter or compost transferred to a 3rd party (see the form in Section 2).

See Section 16 – Record Keeping Forms for examples of forms that will assist in keeping these records. Attach a copy of all records kept in Section 17.

11.2 Annual Report

Permittees must submit to TDEC and TDA, at the addresses below, an annual report between January 1 and February 15 of each year of coverage that includes:

a. The number and type of animals on site whether in open confinement or housed under roof;

b. Estimated amount of total litter and compost generated by the CAFO in the previous calendar year (tons);

c. Estimated amount of total litter and compost transferred to a 3rd party by the CAFO in the previous calendar year (tons);

d. Total number of acres for land application covered by the nutrient management plan;

e. Total number of acres under control of the CAFO that were used for land application of litter and compost in the previous calendar year;

f. A summary of all litter and compost discharges to waters of the state from the production area that have occurred in the previous calendar year, including date, time and approximate volume, and

g. A statement indicating whether the current version of the CAFO's nutrient management plan was developed or approved by a certified nutrient management planner.

RECEIVED
2011

See Section 16 for an example annual report form.

CAFO
Tennessee Department of Environment and Conservation
Division of Water Pollution Control
6th Floor L&C Annex, 401 Church Street
Nashville, TN 37243

Tennessee Department of Agriculture
Ellington Agricultural Center
P.O. Box 40627
Nashville, TN 37204

2011

12.0 LANDOWNER'S RESPONSIBILITY GUIDE

Landowner's Responsibility for Constructed Conservation Systems with USDA Assistance

	Landowner	Contractor	Agency
During Planning	• Identifies problems and management objectives. • Checks utility locations. • Assists with survey and site investigation as needed. • Identifies needed permits. • Notifies state historical society, if needed. • Selects from alternatives. • Identifies and applies for cost-share, if desired.		• Inventory resources and identify resource problems. • Analyzes resource data. • Alerts landowner to apparent wetlands, threatened and endangered species, archeological sites, and utilities. • Formulates alternatives to protect resources and meet objectives of landowner. • Evaluates alternatives. • Develops plan for landowner's selected alternative. • Conducts site investigations and surveys as needed. • Informs landowner of operation and maintenance responsibilities.
During Design	▪ Is available for consultation. ▪ Follows up with historical society, if required. ▪ Obtains needed permits and easements. ▪ Identifies utilities and contacts utility company to locate buried utilities. ▪ Reviews design for agreement. ▪ Concurs in Operation, Maintenance, and Replacement Plan.	• May provide assistance for survey and site investigation.	• Surveys site, if needed. • Designs system based on plan. • Reviews design and specifications with landowner. • Prepares cost estimates for construction. • Develops operation and maintenance plan. • Develops Construction Quality Assurance Plan including staking, inspection, documentation, and certification. • Provides agency approval. • Informs landowner of safety responsibilities. ***Note:*** *These items may be provided by a consultant. If provided by a consultant, the design must meet NRCS standards and specifications and certified by the consultant.*

	Landowner	Contractor	Agency
During Construction	▪ Is available for consultation and decision. ▪ Follows all Federal/state/local laws, rules, and regulations. ▪ Hires contractors. ▪ Hosts pre-construction conference. ▪ Notifies utilities prior to construction activities. ▪ Notifies contractor of utility location. ▪ Notifies agency before starting construction. ▪ Authorizes contractor to begin work. ▪ Protects cultural and historical resources, as required. ▪ Implements landowner part of Construction Quality Assurance Plan (QAP). ▪ Assures compliance with design.	• Participates in pre-construction conference. • Observes and verifies located utilities. • Works safely in accordance with OSHA requirements. • Informs landowner of planned construction schedule. • Obtains materials, equipment, and appropriately skilled people onsite as scheduled. • Implements contractor part of Construction QAP. • May provide layout and construction check surveys. • Uses materials specified in construction plan. • Builds to specific dimensions, elevations, and workmanship. • Documents construction materials used. • Furnishes measurements and other needed information for certification of completion.	• Assists landowner with pre-construction conference. • Implements agency part of Construction QAP. • Informs landowner and contractor of results of inspections. • Informs landowner of presence of unexpected conditions or unexpected cultural and historical resources. • Assesses need for design changes and provides alternatives as appropriate. • Certifies proper completion of construction.
Maintenance	Follows Operation, Maintenance, and Replacement Plan and updates it as needed. Contacts agency for additional assistance, if needed.	Provides warranties to landowner as agreed.	Follows up with operation and maintenance plan and periodically assists landowner to update plan.
	The landowner is ultimately responsible for the proper construction and maintenance of a conservation system.	The contractor is responsible for constructing the system according to design and specifications, for quality control and safety.	The technical agency is responsible for inspecting and certifying that project plans and specifications are met. Agency staff cannot train or serve as foreman for contractors.

JAN 5 2011

13.0 DRAWINGS & CONSTRUCTION SPECIFICATIONS

2011

U. S. Department of Agriculture
Natural Resources Conservation Service

Charles Mason

Poultry System

(This sheet generates nutrient values and volumes for poultry litter)

Poultry Type	Broiler (2.1 avg. weight)
Number of Birds	46,000
Method of Dead Bird Disposal	Composting
Mortality Rate	5.0 %
Flocks per Year	6.0 flocks per year
Pounds of Litter Produced/yr	579,600 lbs/yr
Volume of Litter Produced/yr	19,320 cu.ft./yr
Tons of Litter Produced/yr	290 tons/year
Tons Fed to Cattle	
Tons of Litter sold or given away	
Tons of Litter Needed for Compostin	
a. Dead Birds Produced	14 tons/year
b. Litter Needed	36 tons/year
Tons of Compost to Spread	43 tons/year
Tons of Litter/Compost to Spread	297 tons/year
Method of Storage & Cleanout	Broiler (stockpiled)
Nutrients Produced	10,397 lbs of N per yr
	16,337 lbs of P2O5 per yr
	8,911 lbs of K2O per yr
Nutrient Value of Litter/Compost	35 lbs of N per ton
	55 lbs of P2O5 per ton
	30 lbs of K2O per ton

14.0 LITTER AND COMPOST TEST RESULTS

All litter and compost test results should be added to this section of the plan.

15.0 COPIES OF COMPLETED LITTER VENDOR AGREEMENT FORMS

Attach a copy of all completed litter vendor agreement forms in this section.

2.0 LITTER VENDOR AGREEMENT

Animal Manure/Litter will be applied to the land to meet the minimum NRCS Field Office Technical Guide Standards for Waste Utilization (633) and Nutrient Management (590). Animal byproducts taken off of the farm will be land applied in accordance with a Nutrient Management Plan developed in accordance with Nutrient Management (590).

The conditions listed below help to protect water quality. These conditions apply to litter and compost removed from an AFO/CAFO. The material covered by this agreement was removed on _____ from the facility owned by Charles Mason located at 151 Sandidge Road SE, near Cleveland, Tennessee.

A. The litter and compost must be managed to ensure there is no discharge of litter or compost to surface or groundwater.

B. When removed from the facility, litter and/or compost should be applied directly to the field or stockpiled and covered with a minimum of 6 mil. plastic or stored in a building.

C. Litter and/or compost must not be stockpiled near streams, sinkholes, wetlands or wells.

D. Fields receiving litter and/or compost should be soil tested at least every two or three years.

E. A litter and/or compost nutrient analysis should be used to determine application rates for various crops.

F. Calibrate spreading equipment and apply litter and/or compost uniformly.

G. Apply no more nitrogen or phosphorus than can be used by the crop.

H. A buffer zone is recommended between the application sites and adjacent streams, lakes, ponds, sinkholes and wells.

I. Do not apply litter and/or when the ground is frozen or on steep slopes subject to flooding, erosion, or rapid runoff.

J. Cover vehicles hauling litter and/or compost on public roads.

K. Keep records of locations where poultry litter and/or compost will be used as a fertilizer.

As a Third Party Applicator, I agree to maintain records such as those contained in **SECTION 11 — RECORD KEEPING** of this plan. The records will include amounts delivered and spread on farms, and dates and rates of spreading including crop type. I also agree to follow the minimum Federal, State, and local guidelines pertaining to this operation. I have read and understand the NRCS policies regarding nutrient utilization, filter strips, and setbacks for non-application areas.

SIGNATURE OF VENDOR Ed Campbell DATE 12-18-10

JAN

2.0 LITTER VENDOR AGREEMENT

Animal Manure/Litter will be applied to the land to meet the minimum NRCS Field Office Technical Guide Standards for Waste Utilization (633) and Nutrient Management (590). Animal byproducts taken off of the farm will be land applied in accordance with a Nutrient Management Plan developed in accordance with Nutrient Management (590).

The conditions listed below help to protect water quality. These conditions apply to litter and compost removed from an AFO/CAFO. The material covered by this agreement was removed on _____ from the facility owned by Charles Mason located at 151 Sandidge Road SE, near Cleveland, Tennessee.

A. The litter and compost must be managed to ensure there is no discharge of litter or compost to surface or groundwater.

B. When removed from the facility, litter and/or compost should be applied directly to the field or stockpiled and covered with a minimum of 6 mil. plastic or stored in a building.

C. Litter and/or compost must not be stockpiled near streams, sinkholes, wetlands or wells.

D. Fields receiving litter and/or compost should be soil tested at least every two or three years.

E. A litter and/or compost nutrient analysis should be used to determine application rates for various crops.

F. Calibrate spreading equipment and apply litter and/or compost uniformly.

G. Apply no more nitrogen or phosphorus than can be used by the crop.

H. A buffer zone is recommended between the application sites and adjacent streams, lakes, ponds, sinkholes and wells.

I. Do not apply litter and/or when the ground is frozen or on steep slopes subject to flooding, erosion, or rapid runoff.

J. Cover vehicles hauling litter and/or compost on public roads.

K. Keep records of locations where poultry litter and/or compost will be used as a fertilizer.

As a Third Party Applicator, I agree to maintain records such as those contained in **SECTION 11 — RECORD KEEPING** of this plan. The records will include amounts delivered and spread on farms, and dates and rates of spreading including crop type. I also agree to follow the minimum Federal, State, and local guidelines pertaining to this operation. I have read and understand the NRCS policies regarding nutrient utilization, filter strips, and setbacks for non-application areas.

SIGNATURE OF VENDOR Ed Campbell DATE 12-18-10

16.0 RECORD KEEPING FORMS

This section includes forms that may assist the landowner with the record keeping requirements. Attach completed record keeping forms in this section and any other documentation required by Section 11 – Record Keeping.

CHARLES L MASON

Records of Litter And Compost Removed By a Third Party **YEAR: _____**				
Date	**Name of 3rd Party or Vendor**	**Type of Material**	**Amount of Material Removed (Units)**	**Litter/Compost Nutrient Analysis Provided?**

Note: Address and phone number of Vendor/Third Party is included in Section 15 of the CNMP. Copies of pages 24, 27, 29, 30, 38, and 39 should be provided to the Vendor/3rd Party.

Record of Litter and Compost Structure Inspections				
Date	**Inspector Initials**	**Litter Level**	**Compost Level**	**Deficiencies Notes and Corrective Actions Taken**

Note: Litter and storage structures should be inspected weekly, and all corrective actions documented.

ANNUAL REPORT **CHARLES MASON POULTRY OPERATION** **Date Submitted:_____**	
1.	Number and types of animals on site.
2.	Estimated amount of litter and compost generated in the previous calendar year.
3.	Estimated amount of litter and compost transferred to a 3rd party in the previous calendar year.
4.	Total number of acres for land application covered by the nutrient management plan.
5.	Total number of acres under control of the landowner that were used for land application of litter and compost in the previous calendar year. **No litter or compost was applied on this farm.**
6.	Summary of all litter and compost discharges to waters of the state from the production area that have occurred in the previous calendar year, include date, time and approximate volume.
7.	The current version of the Comprehensive Nutrient Management Plan was developed and/or approved by a certified nutrient management planner.

Mail a completed form to the following agencies:

Tennessee Department of Environment and Conservation
Division of Water Pollution Control
6th Floor L&C Annex, 401 Church Street
Nashville, TN 37243

and

Tennessee Department of Agriculture
Ellington Agricultural Center
P.O. Box 40627
Nashville, TN 37204

POULTRY WASTE MANAGEMENT SYSTEM CONSTRUCTION SPECIFICATIONS

prepared for

CHARLES MASON POULTRY FARM

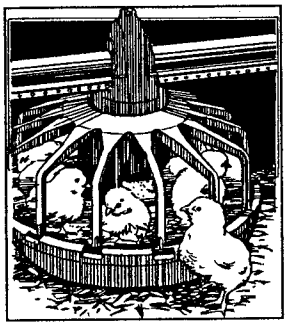

in

Bradley County, Tennessee

in cooperation with

Bradley County Soil & Water Conservation District
and
United States Department of Agriculture
Natural Resources Conservation Service

JAN 2011

CHARLES MASON POULTRY FARM
BRADLEY COUNTY, TENNESSEE
POULTRY WASTE MANAGEMENT SYSTEM
CONSTRUCTION SPECIFICATIONS

TABLE OF CONTENTS

SCOPE....1
CLEARING....1
EXCAVATION....1
EARTHFILL....1
- Placement....1
- Moisture Control....1

WATER SUPPLY....2
TIMBER FABRICATION AND INSTALLATION....2
- Wood and Timber....2
- Handling and Storing....2
- Fasteners....2

ROOFING....3
- Trusses....3

GUTTERS....3
- Materials....3
- Fabrication....3
- Installation....3
- Outlets....4

CONCRETE....4
- Design Mix....4
- Consistency....5
- Fiber Reinforced Concrete....5
- Forms....5
- Timing and Temperature....5
- Conveying and Placing....6
- Finishing....6
- Curing....6
- Expansion joints....6

STEEL REINFORCEMENT....7
GRAVEL....7
GEOTEXTILE....7
SAFETY AND HEALTH....7
SYSTEM REVISIONS OR MODIFICATIONS....7
LANDSCAPE AND VEGETATION....7

SCOPE

This specification shall consist of the clearing, grubbing, excavation, backfill, concrete, forms, reinforcing steel, timber, trusses, sheet metal roofing, fasteners, other appurtenances and services required for the construction of waste storage or waste conveyance structures (i.e., dry stacks, composters, tanks, flumes, etc.) and the disposal of all cleared and excavated materials. All materials must be sound and of good quality with a minimum life expectancy of not less than 10 years. Construction shall be carried out in such a manner that erosion, water, air, and noise pollution will be minimized and held within legal limits as established by state and federal regulations.

All structures shall be constructed according to plans furnished by the Natural Resources Conservation Service (NRCS) and in accordance with NRCS's engineering standards for these practices, as well as local building codes and current industry standards. Any deviation from the approved drawings and specifications must be approved by the engineer prior to construction.

CLEARING

All trees, brush, stumps, boulders, rubbish and manure shall be removed from the foundation, storage, and spoil area(s) before excavation is performed. All material cleared from the area shall be disposed of by burning or burying on-site or hauling to an appropriate landfill. All burning shall conform to state and federal laws and regulations. Trees and other cleared vegetation will be cut flush with the ground surface in spoil areas. The foundation and/or storage area will have all stumps, roots and vegetation removed. The general area around buildings will also require grubbing as necessary to complement the use intended for the structure. The limits of the grubbing will be staked by the engineer or his/her agent.

EXCAVATION

Top soil excavated from the site will be stockpiled for later placement around the completed structure. Soils containing excessive organic material will be removed from the foundation area. The completed excavation and placement of spoil material shall conform as nearly to lines, dimensions, grades, and slopes shown on plans or staked on the ground as skillful operation of the excavating equipment will permit. Generally, spoil will be placed and spread to blend with the existing terrain of the spoil area. Runoff from outside drainage areas will be diverted away from the excavation area.

Excavated surfaces too steep to be safe and stable if unsupported shall be supported as necessary to safeguard the work and workmen, to prevent sliding or settling of the adjacent ground, and to avoid damaging existing improvements. The width of the excavation shall be increased as necessary to provide space for sheeting, bracing, shoring, and other supporting installations. When the work is completed, such supporting installations shall be removed.

EARTHFILL

Placement

Earth material placed for pads, flooring, liners or foundations shall be good sandy clay or clayey sands and gravels free of detrimental amounts of sod, roots, large stones, and other objectionable material. Highly plastic clay soils should be avoided.

Begin placing and spreading the fill material at the lowest point of the foundation and bring the fill up in approximately horizontal layers not exceeding 9 inches loose thickness. These layers shall be reasonably uniform in thickness and shall extend over the entire area of the fill. Each layer shall be compacted by 4 complete passes with a 250 psi sheepsfoot roller or other equivalent methods approved by the engineer or his/her agent.

If a minimum required density is specified, each layer of fill shall be compacted as necessary to obtain that required density.

All finished work shall be left in a neat and sightly condition. The outer edges and slopes of the fill shall blend with the surrounding landscape and complement the structure built upon it.

Moisture Control

All fill material shall have a moisture content sufficient for the required compaction. Fill material which is too dry shall be moistened by adding water or by thoroughly mixing with moist fill until an acceptable moisture level is obtained. Fill material which is too wet shall be allowed to dry out naturally or shall be dried by disking or shall be thoroughly mixed with dry fill

material until an acceptable moisture level is obtained.

The moisture content of the fill shall be maintained within the limits to:

1. Prevent bulking or dilatance of the material under the action of the hauling or compacting equipment.
2. Prevent adherence of the fill material to the equipment.
3. Ensure the crushing and blending of the soil clods and aggregation into a homogeneous mass.
4. Contain adequate moisture so that a sample can be hand molded without the mold oozing through the fingers or squeezing out any water.

WATER SUPPLY

A water source shall be available at the facility.

TIMBER FABRICATION AND INSTALLATION

Above ground timber structures, such as litter dry stack facilities, shall be constructed on a firm foundation to the lines and grades shown on the plans. Dimensions and spacings shown on the plans and drawings are minimum requirements for the 25-year wind and snow loads. These dimensions and spacings may be altered if the result is a stronger structure, with prior approval of the engineer. In no case will the dimensions and spacings be modified in a way which would reduce the strength of the structure. All framing shall be true and exact. Timber shall be accurately cut and assembled to a close fit.

Appropriate bracing for safety and structural stability during construction shall be used.

Wood and Timber

All material shall be sound wood, free from decay, and of new quality. Good quality, used, pressure-treated lumber may be utilized for walls of composter bins and dry stack storage areas. All structural timber shall be dense, structural quality, and graded in accordance with the Standard Grading Rules for Southern Pine Lumber. Unless otherwise specified, all timber and lumber shall be furnished in American Standard dressed sizes. All sizes specified are nominal sizes.

All structural timber, posts, poles, and lumber, except roof girders, rafters, purlins, trusses, knee braces, and attic bracing shall be pressure treated. Treated timber and lumber shall be impregnated with the specified type and quantity of preservative and conform to Federal Specification TT-W-571. The minimum net retention of the common preservative, chromated copper arsenate, shall be 0.4 lbs/cf (pcf) for dimension lumber used above ground. For structural posts or timbers in contact with the ground, 0.6 pcf is recommended. Lumber used for walls of composting bins and dry stack storage areas may be treated to a 0.4 pcf level.

Post and poles shall be set plumb and to the depths shown on the drawings. Backfill around posts/poles shall be concrete as shown on the drawings or shall be hand tamped earth if allowed on the drawings. Post/poles shall be temporarily braced until girders, plates, or other members are installed to maintain plumb alignment.

All wood and timber shall be **No. 2 Southern Pine** or better (non-dense No. 2 is **not** acceptable). All wood and timber shall be pressure treated except purlins, trusses, rafters, girders, and overhead braces.

Handling and Storing

All timber and lumber stored at the site of the work shall be neatly stacked on supports at least 12 inches above the ground and protected from the weather by suitable covering. Untreated material shall be so stacked and stripped as to permit free circulation of air between the tiers and courses. Treated timber may be close-stacked. The ground underneath and in the vicinity of all stacks shall be cleared of weeds and rubbish. The use of cant hooks, peavies, or other pointed tools except end hooks, will not be permitted in the handling of structural timber or lumber. Treated timber shall be handled with rope slings or other methods which will prevent the breaking or brushing of outer fibers, or penetration of the surface in any manner.

Fasteners

Connections between wood members requiring bolts may be initially done with appropriately sized nails until such time as it is expedient to add the bolts, unless specified otherwise in the drawings. Bolts shall be added as soon as practicable, before the building is declared structurally sound, and before being accepted as complete. Nails and

spikes shall be driven with just sufficient force to set the heads flush with the surface of the wood. Holes for machine bolts shall be bored with a bit of the same diameter as the bolt. Appropriately sized washers shall be used in contact with all bolt heads and nuts that would otherwise be in contact with the wood.

Spiral or annular ring shank nails shall be used in all connections of pressure treated wood. Nails to fasten rafters, girders, cleats, scabs, wooden sidewalls, and/or braces to the pressure treated poles shall be 20d to 40d size or as specified on the drawings. Untreated framing members shall be fastened to each other with 16d to 20d nails. Examples include roof purlins to rafters, and tie-down cleats or braces to rafters or girders. Various galvanized metal fasteners, with appropriate joist or deck nails, may be used to facilitate assembly, as approved by the engineer. All bolts, washers, nuts, nails, and other hardware exposed to rain or animal wastes shall be galvanized unless otherwise specified.

ROOFING

Roofing shall be galvanized metal in standard lengths and widths. Roofing material shall be a minimum of 29 gauge and double ribbed. Roofing shall be installed in accordance with manufacturer's recommendations. If any other type of roofing material is desired, it must first be approved by the engineer. Nails used to attach the roofing material to the purlins shall be lead-headed nails, aluminum nails with neoprene washers, or other type as approved by the NRCS approving authority.

The contractor shall provide the Landowner and NRCS with a **certification** stating that the material meets the above requirements.

Trusses

Trusses shall be CANTILEVER type. Trusses may be metal or wood and shall be designed to handle a minimum of 25 pounds per square foot and shall be installed on the spacing compatible with the design. Trusses shall have a minimum of 12 inches of overhang. Trusses may be pre-fabricated, manufactured trusses.

Manufactured trusses will be installed in accordance with the manufacturer's instructions. All trusses will be of a design approved by a registered professional engineer. A copy of the truss certification shall be provided to the NRCS approving authority prior to truss installation.

Truss anchorage and associated supports shall be as shown on the drawings or other acceptable methods as approved by the engineer.

GUTTERS

Guttering indicated on the drawing is 6 inch seamless aluminum with one downspout.

Materials

Gutters and downspouts shall be made of aluminum or galvanized steel. Galvanized steel shall have a minimum thickness of 0.027 inches and the downspout shall have a minimum thickness of 0.020 inches. Gutters shall be a minimum of 6 inches and of standard shape. Galvanized steel gutters shall not be used with aluminum downspouts and aluminum gutters shall not be used with galvanized steel downspouts.

Spikes and ferrules shall be made of corrosion resistant materials. Spikes shall be a minimum of 8-inches long and a 1/4 inch in diameter. Ferrules shall be compatible in length with the top width of the gutter.

Rock filled trenches shall be backfilled with natural rock. The rock shall be poorly graded (all rock fragments of approximately the same size) and free of appreciable amounts of sand and/or soil particles. Crushed limestone shall not be used for backfill unless it has been washed. Any plastic corrugated drain tubing shall meet the requirements of practice standard and specification 606 - Subsurface Drains.

Fabrication

Continuous gutters may be formed at the installation site with cold forming equipment. As many joints shall be eliminated as possible and practical. Lap joints are more commonly used and should be used in lieu of butt joints on long runs. The joint method shall be most compatible and applicable to the material used and the specific application. Joints shall be made watertight by sealing with mastic compatible with the gutter material or by soldering. All soldered joints shall be watertight, smooth and exhibit a workmanlike appearance.

Installation

Gutters shall be installed at the locations shown on the plans or approved in the field.

The fabrication shall be inspected and approved before the gutters are hung. Gutters shall be hung by the method shown on the plans or approved by the NRCS Representative.

Gutters may be supported by spike and ferrule, strap hangers or shank hangers. Spike and ferrule is not recommended if girth of gutter exceeds 15 inches. Girth is the width of sheet metal from which gutter is fabricated.

Gutters shall be fastened to a structural member of the building. Spikes shall be driven in to the end of rafters or truss top chord member. Straps and bracket hangers may be nailed into the sheathing but should also be nailed into the rafters.

The maximum spacing of gutter supports shall be 48 inches for galvanized gutters, 32 inches for aluminum. Maximum support spacing shall be one-half of that previously stipulated when ice and snow is a problem. The bottom slope shall be 1/16 inch per foot or steeper.

Downspouts shall be securely fastened to posts, walls, or other building support members. Downspouts shall be securely fastened at the top and bottom. Intermediate supports shall be installed that are a maximum of 10 feet apart. Intermediate supports shall be installed at any joints in the downspout. Downspout supports shall be compatible with the downspout shape and sufficiently stable to support the downspout full of ice or water. Downspouts shall be of the same material as the gutters.

Outlet tubes shall be securely fabricated into the gutter. The outlet tube shall not serve as a restriction and its cross-sectional area shall be approximately equal to that of the downspout. Outlet tube installation shall be watertight and equally as strong as the gutter and downspout.

Outlets

Roof runoff systems shall outlet at a location that will not flood other facilities, produce erosion or scour or permit the runoff to enter unprotected areas. The outlet shall be protected from livestock, machinery or other damage. Outlets that will cause erosion shall have splash blocks or other impact absorbing measures installed.

Pipe used to carry guttered water away from the building may be PVC DWV pipe to meet ASTM D2665 or better. All pipe must be protected in such a manner as to protect it from damage from animals and equipment.

CONCRETE

Design Mix

The concrete mixture shall contain a minimum of six bags of cement per cubic yard. The water content shall not exceed 6 gallons per bag of cement in the mixture. The concrete mixture shall have a minimum 28 day compressive strength of 3000 psi. Portland cement shall meet the requirements of ASTM Specification C150. Aggregates shall meet the requirements of ASTM Specification C33. Clean water shall be used in the mix. Calcium Chloride and other chemical admixtures for concrete will not be accepted unless expressly specified in the drawings or specifications, or approved by the approving official.

Fly ash (pozzolans) may be used and shall conform to ASTM C618. Fly ash shall be limited to 20% by weight. **Minimum** cement (cement plus fly ash) to be used shall be 470 pounds (5 bags) per cubic yard. Aggregates shall meet the requirements of ASTM C33. The **maximum** coarse aggregate size shall be one inch. (#57 stone). The concrete shall contain an air entraining admixture meeting the requirements of ASTM C260. The air content of the concrete at placement shall be 6 % $\pm$ 1%. The concrete supplier shall provide a **certification** of the mix delivered. The certification shall state the types and amounts of cement, water, admixtures, aggregates, etc. added.

Concrete shall be consolidated with internal type mechanical vibrators capable of transmitting vibration to the concrete at frequencies not less than 6,000 impulses per minute.

The location, manner, and duration of the application of the vibrators shall be such as to secure maximum consolidation of the concrete without causing segregation of the mortar and coarse aggregate, and without causing water or cement paste to flush to the surface. Vibration shall be applied to the freshly deposited concrete by slowly inserting and removing the vibrator at points uniformly spaced and not farther apart than twice the radius over which the vibration is visibly effective. The vibrator shall extend into the previously placed layer of fresh concrete, at all points, to insure effective bond between layers.

The use of vibrators to transport concrete within the forms will not be permitted.

In extreme conditions it may be necessary to: (1) Restrict placement to late afternoon or evening; (2) Restrict the depth of layers to assure coverage of the previous layer while it will respond readily to vibration; (3) Suspend placement until conditions improve; and (4) Remove forms, repair, patch, and re-apply wet curing on small areas at a time.

Consistency

The amount of water used in the concrete shall be the minimum necessary to obtain the required workability. The consistency of the concrete shall be such that it can be worked readily into the corners and angles of the forms and around reinforcement but without permitting the materials to segregate or excess free water to collect on the surface. The slump shall be between 2-5 inches as tested by "The Test for Slump for Portland Cement Concrete", ASTM Specification C-143. The air content of the concrete at time of placement shall be 6% ± 2%. Air entraining admixtures shall conform to ASTM Specification C-260.

Fiber Reinforced Concrete

Fiber shall consist of virgin homopolymer polypropylene fibers, either the collated fibrillated type or the monofilament type. The minimum rate of application is 1.5 lbs. of fiber per cubic yard of concrete.

The addition of fiber to a concrete mix may cause an apparent reduction in slump. However, no additional water shall be added to the mix to improve workability. If needed, a high-range water reducing admixture (superplasticizer) should be added to the concrete mix. During placement the fiber mix will generally require more effort and vibration to move the mix and consolidate it into the forms due to the lower slump nature. Properly controlled internal vibration is acceptable, but external vibration of the forms and exposed surfaces are preferable to prevent fiber segregation.

If welded wire fabric is omitted from concrete slabs and only fiber additives are used, contraction joint spacing will be reduced from a maximum of 30 feet to a maximum of 10 feet in any direction. Sawed joints shall be 1/4 of the slab's thickness in depth. Formed joints shall be the keyway type. Smooth vertical joints through the slab are not permitted.

Fiber additives in concrete do not take the place of structural steel reinforcement. Where steel reinforcement is shown on drawings it shall be placed as shown.

Forms

Forms shall be of wood, steel, or other approved material. Forms shall be true to line and grade, mortar tight, and sufficiently rigid to prevent objectionable deformation under load. Form surfaces shall be smooth, free from irregularities, dents, sags, or holes when used for permanently exposed surfaces. Rods used for internal ties shall be so arranged that, when the forms are removed, metal will not be less than 1 inch from any concrete surface. Forms for walls and vertical sections 2 feet high and taller shall be stabilized with adequate tie rods, walers, cat-heads and sufficient bracing to prevent shifting or movement of forms during placing of concrete.

Forms for exposed surfaces shall be coated with a non-staining form release agent which shall be applied before the concrete is placed. All excess release agent on the form surfaces and any on surfaces requiring bonding with concrete shall be removed.

All form removal shall be accomplished in such a manner as to prevent injury to the concrete. Forms for floor slabs and such work may be removed after a minimum of 24 hours. Forms for walls shall be left in place for a minimum of 3 days. All forms must be removed before final inspection of the work. All repair work must be done immediately after removal of forms.

Timing and Temperature

Concrete shall be placed within 1-1/2 hours after introduction of water to the cement and aggregates. Concrete shall not be placed when the outside temperature is expected to fall below 40°F at the time the concrete is delivered and placed at the work site. Concrete shall not be exposed to freezing temperatures during the curing period. Concrete, when deposited in the forms during hot weather, will have a temperature not greater than 90°F at the time of placement. Ice may be used as a portion of the mixing water to control temperature provided all ice is melted in the mixing process. When the outside temperature reaches or exceeds 90°F, the concrete shall be placed **within 45 minutes after batching**. A longer time may be allowed, provided the setting time of the

JAN 2011

concrete is extended a corresponding amount by the addition of an approved set retarding admixture.

Conveying and Placing

No concrete shall be placed until the approving official has given approval of the in-place subgrade, forms, reinforcing steel, and any other items involved or affected by the concrete placement.

Concrete shall be conveyed from mixer to forms as rapidly as practicable by methods which will prevent segregation or loss of ingredients. Hoppers and chutes, pipes, or "elephant trunks" may be used. There shall be no vertical drop greater than 5 feet.

Unless otherwise authorized, all concrete shall be placed upon clean, damp surfaces free from frost, ice, standing and running water, and never upon soft mud, dried porous earth, or fill that does not meet specified compaction requirements. Soft mud or other unacceptable foundation material shall be removed and replaced with gravel or other approved material.

Concrete shall be deposited as close as possible to its final position in the forms. Concrete shall be thoroughly consolidated by rodding or mechanically vibrating the concrete in place supplemented by hand-spading and tamping to remove air voids. Vibrating equipment shall be used when pouring walls and other thin sections.

Concrete floor slabs may be placed at one time or may be poured in sections at different times. When steel reinforcement is specified for the floor slab, formed contraction joints shall be placed at intervals not to exceed 30 feet in any direction unless otherwise specified. When steel is not used, joints shall be as specified under **Fiber Reinforced Concrete**. The formed edges of each section shall be keyed to lock the edges of adjacent sections together. The edge forms may be removable metal or wood forms having the required keyed shape or may be thin galvanized metal designed to be left in place. Smooth vertical edged joints will not be allowed.

Finishing

Defective concrete, honeycombed areas, voids left by the removal of tie rods, and unacceptable ridges left on concrete surfaces shall be repaired immediately after the removal of forms unless otherwise authorized and directed. Voids left by the removal of tie rods shall be reamed and completely filled with mortar.

Defective concrete shall be repaired by cutting out the unsatisfactory material and placing new concrete which shall be secured with keys, dovetails or anchors. Excessive rubbing of formed areas will not be permitted. All unformed surfaces of concrete, exposed in the completed work, shall have a wood float finish without additional mortar.

Curing

Concrete shall be prevented from drying for a curing period of at least 7 days after placement. All exposed surfaces of concrete shall be protected from the direct rays of the sun for at least these first 7 days. All concrete shall be cured by keeping continuously moist for the entire curing period, or until curing compound is applied. Moisture shall be maintained by sprinkling , flooding, fog spraying, or by covering with materials kept continuously moist such as canvas, cloth mats, straw, sand, polyethylene, or other approved material. Wood forms (except plywood) left in place during the curing period shall be kept wet. Formed surfaces shall be thoroughly wetted immediately after forms are removed and shall be kept wet until patching and repairs are completed. Water or covering shall be applied in such a way that the concrete surface is not eroded or otherwise damaged.

If curing compound is used, two coats shall be applied to all concrete surfaces except construction joints and surfaces to which other concrete will be bonded. The compound shall be sprayed on the moist concrete surfaces as soon as free water has disappeared, but shall not be applied to any surface until patching, repairs and finishing of that surface are completed. Curing compound shall meet the requirements of ASTM Specification C-309, Type 2, white pigmented.

Expansion joints

Expansion joint material shall not extend above adjacent concrete surfaces. Expansion joint material shall be the preformed, bituminous type meeting the requirements of ASTM D994 or D1751.

STEEL REINFORCEMENT

Reinforcement steel and welded wire fabric shall be new, clean, and free of oil, grease, paints, and flaky rust. Steel bars for concrete reinforcement shall be deformed billet-steel bars, conforming to ASTM Specification A-615, Grade 40 or 60. Welded wire fabric shall conform to the requirements of ASTM Specification A-185.

Reinforcement steel shall be accurately placed as specified and secured in position in a manner which will prevent its displacement during placement of the concrete. If reinforcing steel is spliced, the splices shall provide an overlap equal to 30 times the diameter of the smaller bar in the splice and shall be tied at both ends of the splice. Steel reinforcement in concrete block walls shall be tied in place prior to laying the blocks. Dropping or placing required steel reinforcement into the holes of concrete blocks without properly overlapping and tying the steel together with the foundation steel is not acceptable. Field bending of steel will be permitted. When steel is heated for bending, it must be allowed to air cool back to ambient temperature. Steel shall not be fast-cooled with water or air.

Reinforcement steel and welded wire fabric shall be suspended off the ground and other concrete contact surfaces by using support blocks of concrete bricks, concrete blocks or pieces of blocks, wire stands, or other approved method prior to the placing of concrete. Support blocks of stone, wood materials, earth, earth clods, clay bricks, scrap metal and other unapproved materials are not acceptable. During concrete placement welded wire reinforcement shall be pulled into the middle of the concrete or the position shown in the drawings. Unless otherwise specified, welded wire fabric shall be spliced in the following manner:

Adjacent sections shall be spliced by overlapping a minimum of one full mesh plus 2 inches, or 6 inches, whichever is greater. The splice length shall be measured from the center of the first transverse wire in one piece of fabric to the center of the first transverse wire in the lapped piece of fabric.

GRAVEL

Gravel under the concrete structures shall meet the requirements of coarse aggregate conforming to AASHTO M43, size 57. The gravel under the concrete shall be compacted by at least one pass of the track or wheels of the placing equipment over the entire surface of the gravel area.

GEOTEXTILE

Geotextile shall be non-woven with a minimum tensile strength of 150 pounds MARV (minimum average roll value) and weighing a minimum of 6 ounces per square yard. It shall be installed according to the manufacturer's recommendations. The minimum lap distance shall be 24 inches. Equipment shall not be allowed to operate directly on top of the geotextile fabric without a cushion of gravel.

Geotextile may be used underneath the gravel entrance pad, but is not required.

SAFETY AND HEALTH

During construction, hard-hats, rollover protection systems (ROPS), and seat belts which meet OSHA requirements should be used on and around all equipment. All local, State, and Federal laws and regulations shall be followed. Special emphasis shall be given to the requirements contained in OSHA's Construction Regulations.

SYSTEM REVISIONS OR MODIFICATIONS

Any revisions or modifications to the drawings and/or specifications shall be approved by the NRCS Engineer, in writing, prior to implementation.

LANDSCAPE AND VEGETATION

The area adjacent and in the immediate vicinity of the structure shall be shaped to blend with the natural surroundings and to complement the structure and work area around it. Shaping shall be in such a way as to drain or divert all overland and roof runoff safely away from the structure and surrounding work area. All disturbed areas around the structure, including spoil areas, shall be vegetated and/or surfaced with gravel, chert, or some other acceptable covering as permitted by the NRCS approving authority. Spoil areas not used for farm traffic shall be vegetated.

Permanent vegetation shall be established to the plant species and by methods prescribed by the approving official. All vegetating of disturbed areas shall be done as critical area

planting and shall include liming, fertilizing, seedbed preparation, seeding and mulching. Temporary vegetation may be used when conditions or seeding dates are not suitable for the establishment of permanent vegetation. Disturbed areas shall be mulched regardless of seeding dates. If farm animals will have access to the vegetated area, it shall be appropriately fenced until vegetation is well established.

POULTRY WASTE MANAGEMENT SYSTEM

LANDOWNER: CHARLES MASON

BRADLEY COUNTY, TENNESSEE

USDA-NATURAL RESOURCES CONSERVATION SERVICE

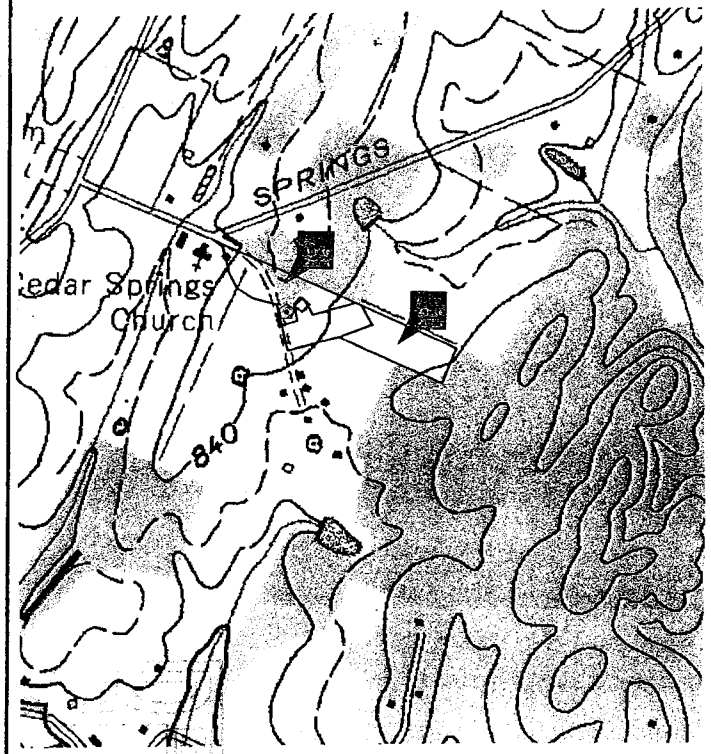

CMAS 1

INDEX TO DRAWINGS

SHEET	DESCRIPTION
1	COVER SHEET AND LOCATION MAP
2	PLAN
3	SIDE AND END ELEVATIONS
4	SECTION A-A AND DETAILS
5	SECTION B-B, C-C, D-D AND DETAILS
6	DETAILS

GENERAL NOTES

1. These plans and attached specifications provide the requirements for construction of a waste storage facility, one component of a Comprehensive Nutrient Management Plan (CNMP).
2. Shop drawings for some components of this facility,i.e. trusses, shall be provided to NRCS before purchase and installation.
3. Changes to these plans must be approved by NRCS technical staff, prior to implementation.
4. Operation and maintenance requirements will be addressed in the CNMP.
5. Landowner shall be responsible for locating and protecting all utilities. Special safety precautions shall be taken when working in the vicinity of gas, electrical or oil lines. Call Tennessee One-Call for further assistance (800) 351-1111 at least 3 days prior to beginning construction.
6. All lines and grades shown on theses drawings are approximate. Actual proposed grades and locations shall be staked in the field by NRCS personnel or his/her agent.
7. All construction shall be in accordance with these drawings and attached specifications.

The United States Department of Agriculture (USDA) prohibits discrimination in all its programs on the basis of race, color, national origin, gender, religion, age, disability, political beliefs, sexual orientation, marital or familial status. (Not all prohibited bases apply to all programs.) Persons with disabilities who require alternative means for communication of program information (Braille, large print, audiotape, etc.) should contact USDA's TARGET Center at 202-720-2600 (voice and TDD).

To file a complaint, write the U.S. Department of Agriculture, Director, Office of Civil Rights, Room 326-W, Whitten Building, 14th and Independence Avenue, SE, Washington, DC 20240-9410 or call (202)720-5964 (voice and TDD). USDA is an equal employment opportunity provider and employer.

APPROVED BY: Dennis M. Wathen

TITLE: Supervisory Civil Engineer

DATE: November 11, 2004

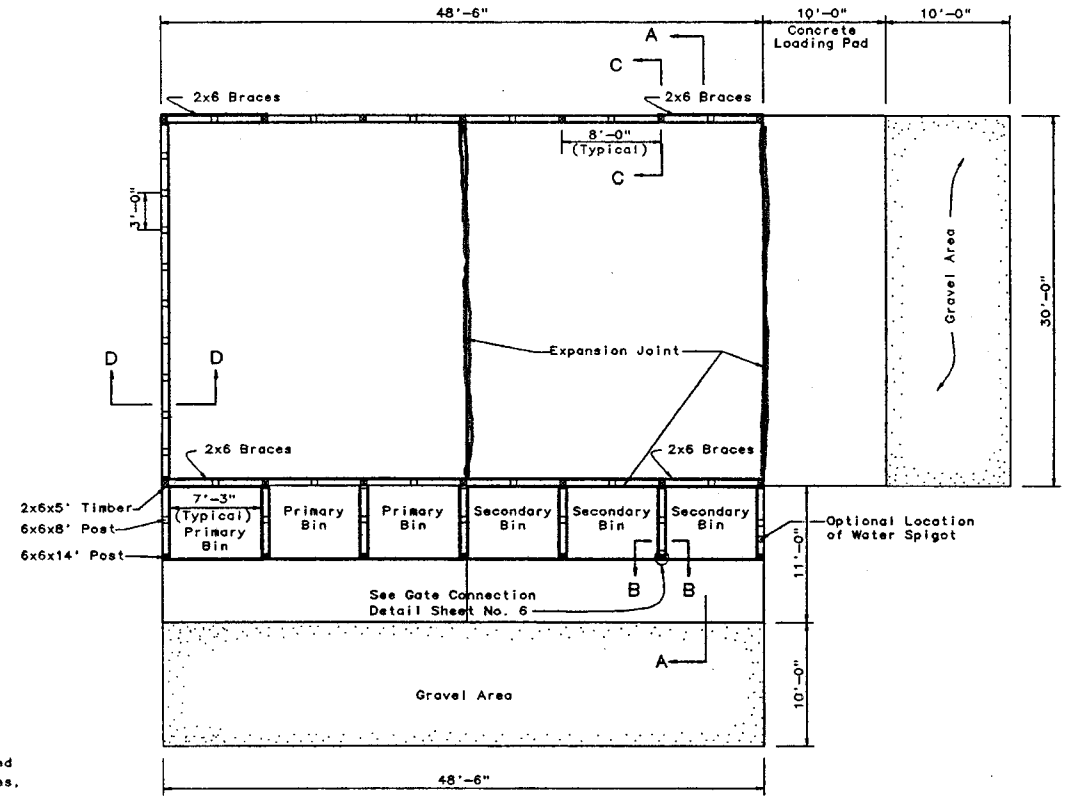

PLAN

LEGEND
■ 6x6x16'
□ 6x6x8'
■ 6x6x14'

5 0 5 10 15 20

SCALE IN FEET

NOTES:

1. For Elevations See Sheet No. 3
2. For Section A-A See Sheet No. 4
3. For Section B-B See Sheet No. 5
4. For Section C-C See Sheet No. 5
5. For Section D-D See Sheet No. 5
6. All Lumber to be Pressure Treated With Preservative - Except Plates, Purlins, and Overhead Braces.
7. Walls are Pressure Treated 2x8 Timbers.
8. A Water Source Shall be Made Available.
9. Concrete in Floor & Loading Pads Shall Be 5" Thick w/6x6 Welded Wire Fabric. For Detail See Sheet No. 5.
10. This Facility Shall Be Constructed in Accordance with Waste Storage Facility Construction Specification 313.
11. This Facility Shall Be Fenced if it is Accesible to Livestock.

CMAS2

POULTRY WASTE MANAGEMENT SYSTEM
CHARLES MASON
BRADLEY COUNTY, TENNESSEE
PLAN

UNITED STATES DEPARTMENT OF AGRICULTURE
NATURAL RESOURCES CONSERVATION SERVICE

Designed WATKINS	Date 11/04	Approved by	
Drawn WATKINS	11/04	Title	
Reviewed		Title	
Checked		Sheet No. 2 of 6	Drawing No. TN-CTST-CM01

2011

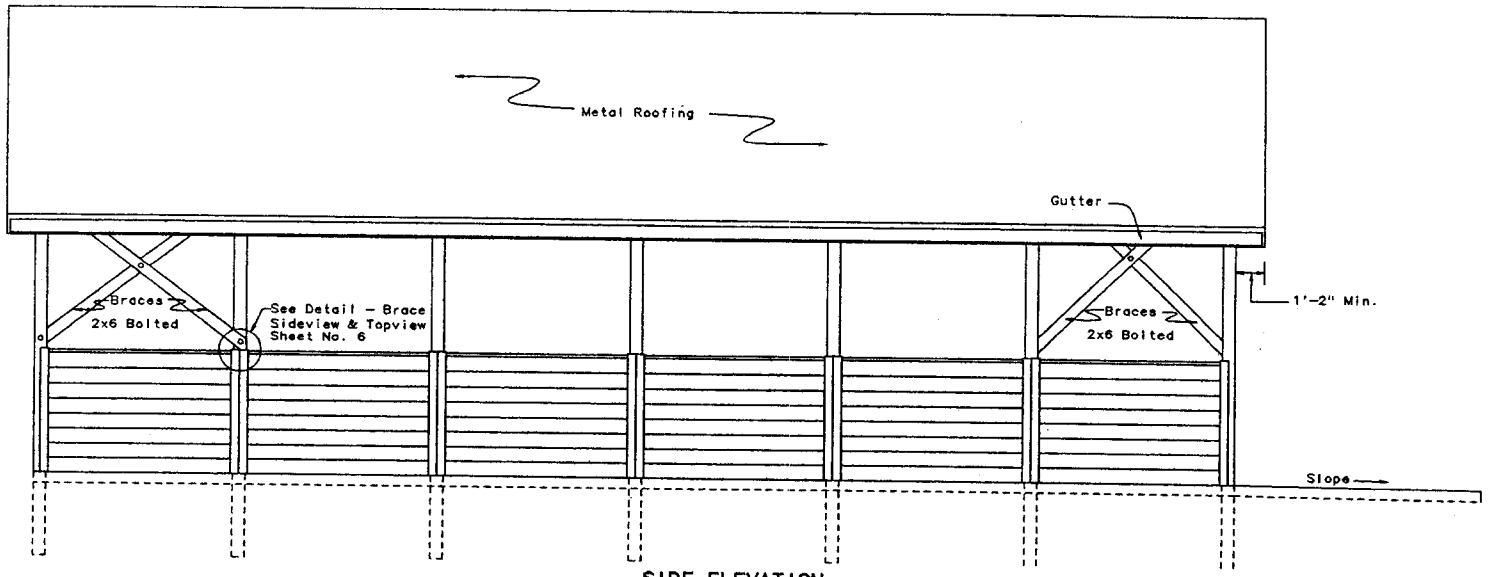

SIDE ELEVATION

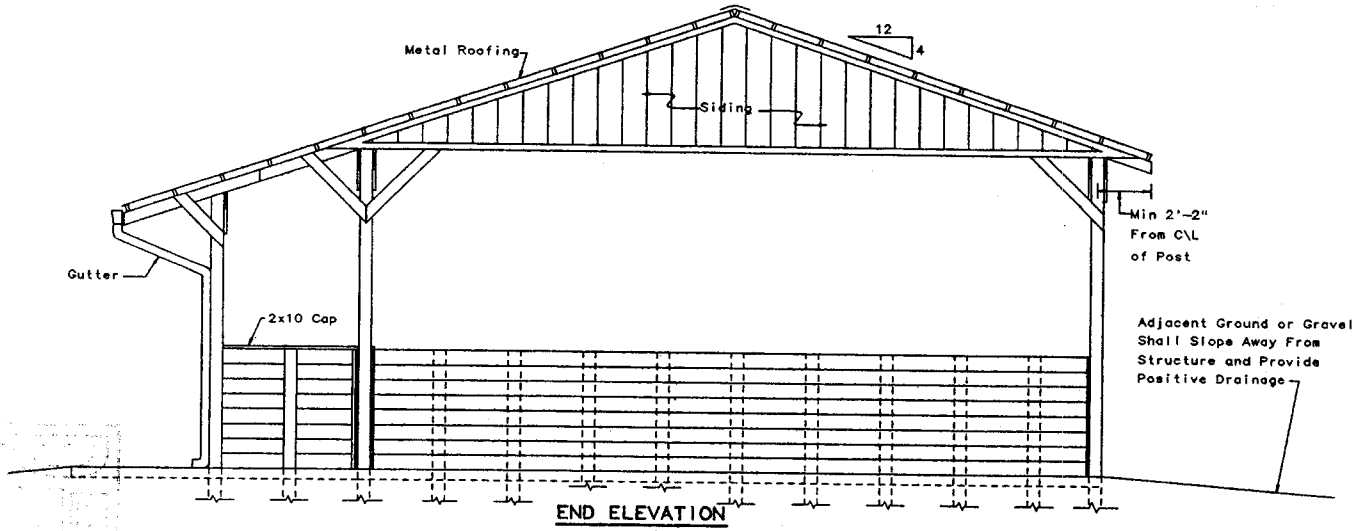

END ELEVATION

NOTES:

1. Gutter Shall Not Outlet in Work Area.
2. Gutter Required Over Composters and Optional Over the Remainder of the Barn.
3. Downspouts Not Shown on Side Elevation.

2 0 2 4 6 8 10

SCALE IN FEET

POULTRY WASTE MANAGEMENT SYSTEM
CHARLES MASON
BRADLEY COUNTY, TENNESSEE
SIDE AND END ELEVATIONS

UNITED STATES DEPARTMENT OF AGRICULTURE
NATURAL RESOURCES CONSERVATION SERVICE

Designed WATKINS	Date 11/04	Approved by	
Drawn WATKINS	11/04	Title	
Revised		Title	
Checked		Sheet No. 3 of 8	Drawing No. TN-CTST-CM01

CMAS3

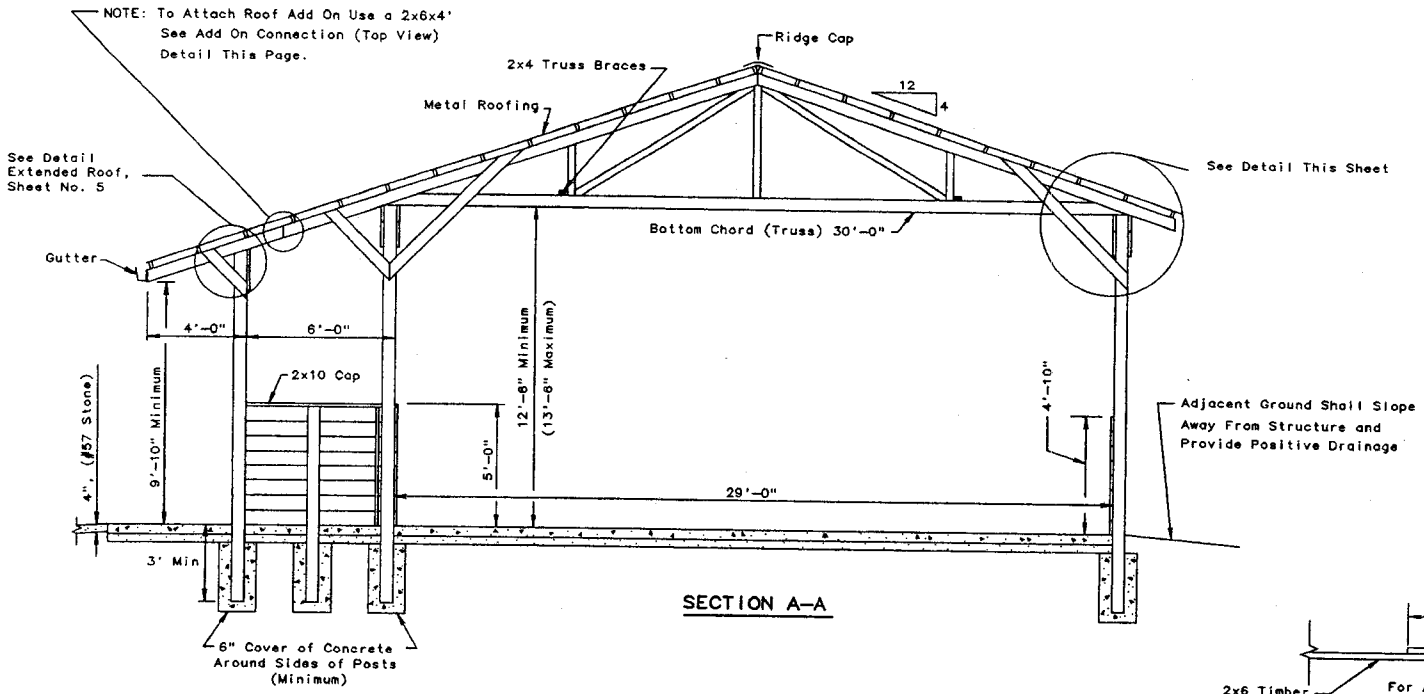

SECTION A-A

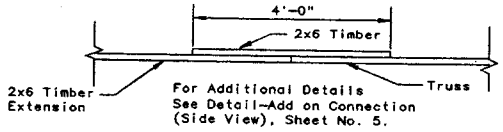

DETAIL-ADD ON CONNECTION (TOP VIEW)

(NOT TO SCALE)

NOTES:

1. Trusses Shall be STANDARD PRATT TYPE or SCISSOR TYPE TRUSS and Shall Be Certified to Support a Minimum of 25 Pounds Per Square Foot. A Copy of the Truss Certification Shall be Given to the Landowner. Metal Trusses May be Substituted. If Metal Trusses are Used, See Metal Truss Roof Connection Details, Sheet No. 6.
2. Seven Trusses are Required.
3. Use Gang Nail Connectors or Equivalent to Assemble Trusses.
4. Gang Nail Connectors Shall Meet FHA Requirements.
5. Truss Area Ends of Building Will be Enclosed Against Weather.
6. Truss Spacing - 8 Feet
7. Posts Shall Extend to Top of Bottom Chord of Truss and Shall be Bolted in Center.

CMAS4

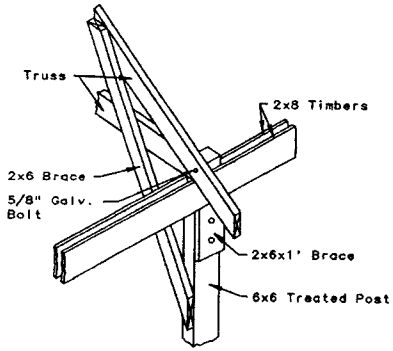

ISOMETRIC VIEW

(NOT TO SCALE)

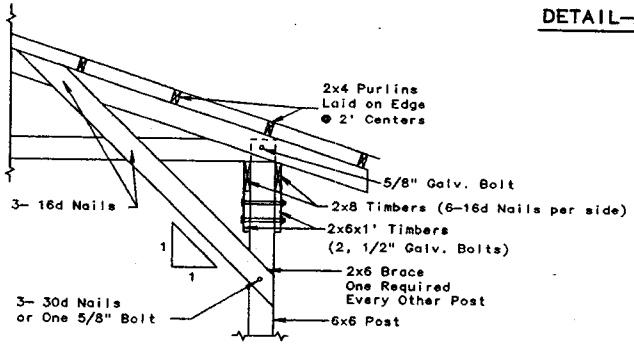

DETAIL-TRUSS

(NOT TO SCALE)

2 0 2 4 6 8 10

SCALE IN FEET EXCEPT AS NOTED

POULTRY WASTE MANAGEMENT SYSTEM
CHARLES MASON
BRADLEY COUNTY, TENNESSEE
SECTION A-A AND DETAILS

UNITED STATES DEPARTMENT OF AGRICULTURE
NATURAL RESOURCES CONSERVATION SERVICE

Designed WATKINS	Date 11/04	Approved by	
Drawn WATKINS	11/04	Title	
Revised		Sheet No. 7 of 8	Drawing No. TN-CTST-CM01
Checked			

2011

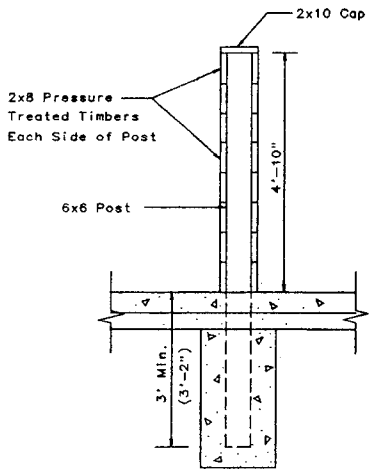

SECTION B–B

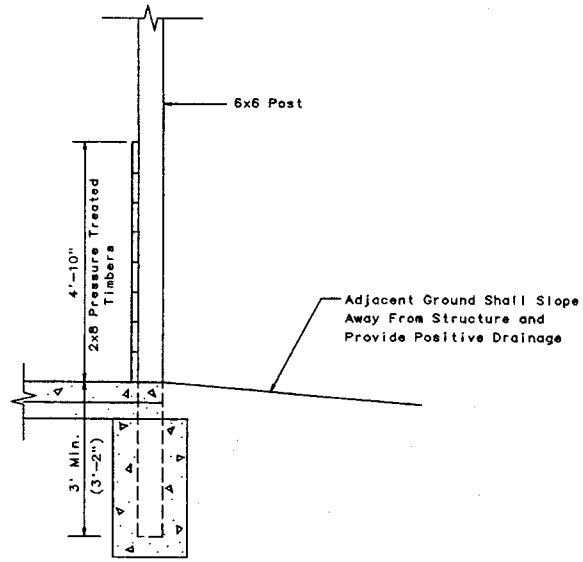

SECTION C–C

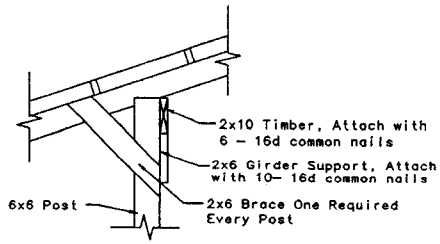

DETAIL–EXTENDED ROOF

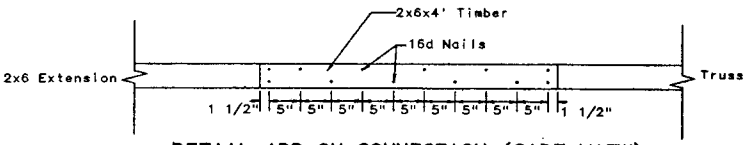

DETAIL–ADD ON CONNECTION (SIDE VIEW)

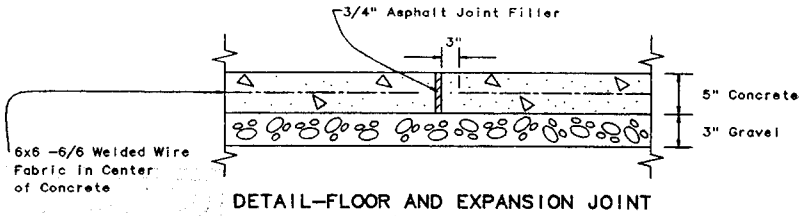

DETAIL–FLOOR AND EXPANSION JOINT

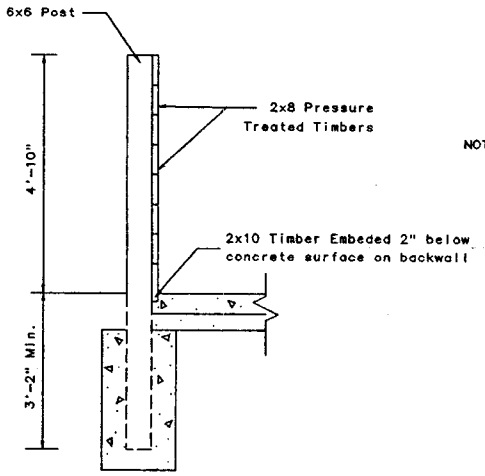

SECTION D–D

NOTES:

1. For Location of Expansion Joints See Sheet No. 2
2. For Sections B–B; C–C and D–D See Sheet No. 2

NOT TO SCALE

POULTRY WASTE MANAGEMENT SYSTEM
CHARLES MASON
BRADLEY COUNTY, TENNESSEE
SECTION B–B, C–C, D–D AND DETAILS

UNITED STATES DEPARTMENT OF AGRICULTURE
NATURAL RESOURCES CONSERVATION SERVICE

		Date		
Designed	WATKINS	11/04	Approved by	
Drawn	WATKINS	11/04	Title	11/11/04
Revised			Title	
Checked			Sheet No. 3 of 8	Drawing No. TN–CTST–CM01

CMA55

JAN 5 2011

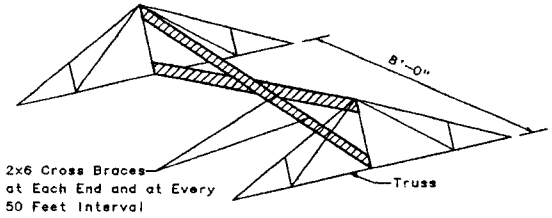

DETAIL–TRUSS CROSS BRACES

(For Wooden Trusses)

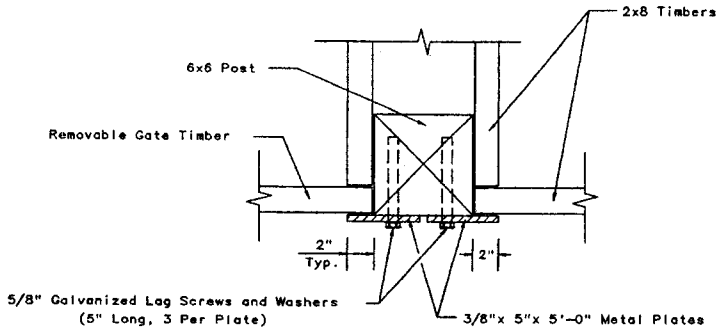

DETAIL–GATE CONNECTION

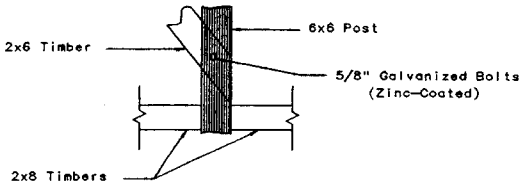

DETAIL–BRACE SIDEVIEW

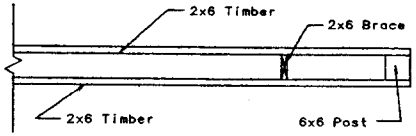

DETAIL – METAL TRUSS ROOF CONNECTION (TOP VIEW)

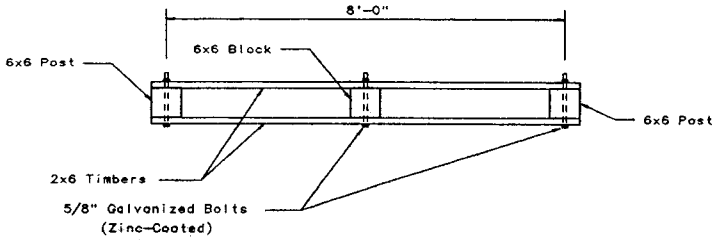

DETAIL–BRACE TOPVIEW

NOTE: For Metal Truss Roof Connection Purlins and Metal Roofing are not shown on the 2x6 Timbers. They Shall Be Installed As Shown the Detail – Truss, Sheet No. 4.

If Metal Trusses are Used, Truss Spacing Shall Be 8 Feet.

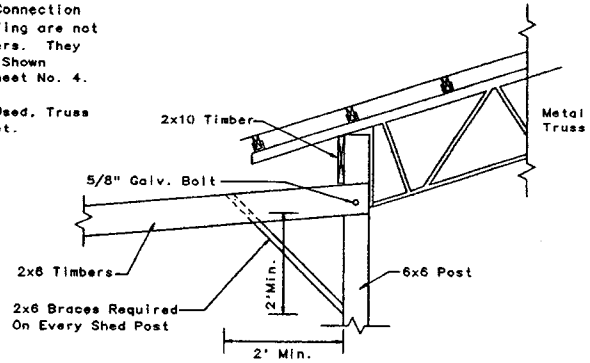

DETAIL–METAL TRUSS ROOF CONNECTION

NOT TO SCALE

POULTRY WASTE MANAGEMENT SYSTEM CHARLES MASON BRADLEY COUNTY, TENNESSEE DETAILS			
UNITED STATES DEPARTMENT OF AGRICULTURE NATURAL RESOURCES CONSERVATION SERVICE			
Designed WATKINS	Date 11/04	Approved by	
Drawn WATKINS	11/04	Title	11/4/04
Reviewed		Sheet No. 6 of 6	Drawing No. TN–CTST–CM01
Checked			

CMAS6

EQIP COST ESTIMATE SUMMARY
Landowner: Charles Mason
County: Bradley
State: Tennessee

Description of the Facility: **30' x 48' Poultry Waste Management System with 3 Primary Bins**

1	Site Preparation	8	hours of D6 (140hp) Dozer @	$ 90.00	$ 720.00
2	Gravel	47	tons @	$ 14.00	$ 658.00
3	Concrete, w/WWF	47	cubic yards @	$ 130.00	$ 6,110.00
4	Roofing	2382	square feet @	$ 3.50	$ 8,337.00
5	Lumber < 3000 bd ft	0	board feet, pt @	$ 1.90	$ -
6	Lumber > 3000 bd ft	5573	board feet, pt @	$ 1.75	$ 9,752.75
7	1" Polyethylene Pipe	100	feet @	$ 1.50	$ 150.00
8	Gutter	52	feet @	$ 6.00	$ 312.00
8	Vegetation	1	seeding and fertilizer, acre @	$ 180.00	$ 180.00
9	Erosion Control	1	mulch, acre @	$ 224.00	$ 224.00

TOTAL	$ 26,443.75

REFERENCE COST LIST: **2004 AVERAGE COST LIST - EAST TENNESSEE**
Materials not listed on the cost list do not have a cost provided with them.
This cost is for the landowners use in evaluating bids only.
This cost may not reflect the actual cost of constructing the facility.

MATERIALS LIST
Landowner: Charles Mason
County: Bradley
State: Tennessee

Description of the Facility: **30' x 48' Poultry Waste Management System with 3 Primary Bins**

Site Preparation: 8 hours using a D6 (140 hp) dozer

Concrete

Litter Floor and Entrance Pad	30	x	58.5	x	0.4167	=	731	cubic feet
Composter Floor	11		48.5	x	0.4167	=	222	cubic feet
6x6 posts	49	x	6.125			=	300.1	cubic feet
					Total	=	1254	cubic feet
						=	47	cubic yards

Gravel

Litter Floor and Entrance Pad	30	x	58.5	x	0.25	=	439	cubic feet
Composter Floor	11	x	48.5	x	0.25	=	133	cubic feet
Gravel Entrance Pad - Composter	48.5	x	10	x	0.33	=	162	cubic feet
Gravel Entrance Pad - Litter	30	x	10	x	0.33	=	100	cubic feet
					Total	=	834	cubic feet
						=	31	cubic yards
						=	47	tons

Welded Wire Fabric 29.5 x 58 = 1711 square feet

Expansion Joint 119.5 x 0.4167 = 50 square feet

Posts

6x6x16'	14
6x6x14'	7
6x6x8'	28

Walls and Bracing (all pressure treated)

2x6x5'	9
2x6x8'	
2x6x10'	
2x6x12'	8
2x6x14'	
2x6x16'	
2x8x6'	103
2x8x8'	48
2x8x10'	
2x8x12'	14
2x8x14'	
2x8x16'	96
2x10x6'	6
2x10x8'	6
2x10x10'	

RECEIVED
JAN 2011

	2x10x12'	2	
	2x10x14'		
	2x10x16'		
	2x12x8		
	2x12x10		
	2x12x12		
	2x12x16		
	6x6x6	4	
	Nails	6	50 pound box
	5/8" Bolts w/nuts	20	(galvanized)
	Washers	40	
Roofing	**Area**	**2382**	**square feet**
	Roof Slope Length	18	feet
	Composter Roof Slope Length	26	feet
	Trusses	7	
	2x4x8'		
	2x4x10'		
	2x4x12'	28	
	2x4x14'		
	2x4x16'	76	
	2x6x1'	43	
	2x6x4'	14	
	2x6x6'	11	
	2x6x8'	8	
	2x6x10'	4	
	2x6x12'		
	2x6x14'		
	2x6x16'		
	2x8x8'		
	2x8x10'		
	2x8x12'		
	2x8x16'	12	
	2x10x8'		
	2x10x10'		
	2x10x16'	3	
	2x12x8'		
	2x12x10'		
	2x12x16'		
	Ridge Cap	52.5	feet
	Metal Roofing	630	linear feet
	Siding	300	square feet
	5/8" Bolts w/nuts	0	(galvanized)
	1/2" Bolts w/nuts	0	(galvanized)
	Washers	0	
	Roofing Nails	1	50 pound box

Water Supply

Water Hydrant	1	(frost free)
1" PE Pipe	100	feet

Gate Connection

3/8"x4" Metal Plate (5' Section)	12
5/8" Galvanized Lag Screws	36
Washers	72

Gutter			
	6" Gutter	52	feet
	Downspout	1	
Thermometer		1	(should be at least 3 feet long)
Vegetation		1	acre
	Fescue	50	pounds
	Mulch	40	bales of straw
	Fertilizer	800	pounds of 6-12-12 or equivalent
	Lime	2	tons

NOTES:

1. The quantities in this design are for the landowners use only. The information should be rechecked if being used to order materials.
2. Board Feet Calculations do not include any lumber considered in the roof cost.

2011

PRESSURE TREATED BOARD FEET CALCULATIONS
Landowner: Charles Mason
County: Bradley
State: Tennessee

Description of the Facility: **30' x 48' Poultry Waste Management System with 3 Primary Bins**

Lumber Dimensions Depth inches	Width inches	Length feet	Number of Boards	Lumber cubic inches	Total cubic inches
6	6	16	14	6912	96768
6	6	14	7	6048	42336
6	6	8	28	3456	96768
6	6	0.5	4	216	864
2	6	5	9	720	6480
2	6	8	0	1152	0
2	6	10	0	1440	0
2	6	12	8	1728	13824
2	6	14	0	2016	0
2	6	16	0	2304	0
2	8	6	103	1152	118656
2	8	8	48	1536	73728
2	8	10	0	1920	0
2	8	12	14	2304	32256
2	8	14	0	2688	0
2	8	16	96	3072	294912
2	10	6	6	1440	8640
2	10	8	6	1920	11520
2	10	10	0	2400	0
2	10	12	2	2880	5760
2	10	14	0	3360	0
2	10	16	0	3840	0
2	12	8	0	2304	0
2	12	10	0	2880	0
2	12	12	0	3456	0
2	12	16	0	4608	0
			Total, cubic inches =		802512
			Total Board Feet =		5573

Farm Name: Charles Mason Poultry Farm - Bradley County

Landowner: Charles Mason
151 Sandidge Road
Cleveland, TN 37323

Calculation weight for poultry mortality
(Enter Values in Blue Boxes - Calculated Answers appear in Orange Boxes)

Number =	46,000	No.	Number of Birds in Flock
M =	5.0%	Percent	Anticipated mortality of flock
T =	50	Days	Total Life of Flock
W_b =	4.5	lbs.	Weight of Birds near maturity

Weight of Daily Loss [W_t] = Number *[(M/T) * W_b]

W_t = 207 lbs./day

Calculation of composter volume
(Enter Values in Blue Boxes - Calculated Answers appear in Orange Boxes)

Allow 2.5 cubic feet of composter volume per pound of dead weight in each stage:

$V_1 = V_2 = 2.5 * W_t$ = Volume in each stage

V_1 = 518 ft^3 Stage 1 Volume

Number of Composter Bins:

h =	4.8	feet	height of bin (4 - 5 feet)
d =	6	feet	depth of bin (5 - 6 feet)
w =	7.25	feet	width of bin (7'3" - 10 feet)

V_b = individual bin volume = h*d*w

V_b =	210.1	ft^3	individual bin volume
No. of Bins =	2.5	Each	number of bins (V_1/V_b)
No. of Bins =	3	Each	number of bins - rounded up to neareast whole #)

Stage 2: V_2 equal to or greater than V_1. Stage 2 can be an equal number of bins or one lager bin.

Remarks: Use 3 primary bins and 3 secondary bins.

U.S. DEPARTMENT OF AGRICULTURE
NATURAL RESOURCES CONSERVATION SERVICE
POULTRY LITTER STORAGE FACILITY DESIGN WORKSHEET

Farm Name: Charles Mason Poultry Farm - Bradley County

Landowner: Charles Mason
151 Sandidge Road
Cleveland, TN 37323

[illegible] il Engineer

Calculation of volume of poultry litter to be stored
(Enter Values in Blue Boxes - Calculated Answers appear in Orange Boxes)

Number =	46,000	No.	Number of Birds in Flock
Flocks =	2	No.	Number of Flocks per Storage Period
Litter =	2.1	lbs.	Pounds of Litter per Bird per flock
Density =	30	$lbs./ft^3$	Desity Factor

Manure Volume = (Number * Flocks * Litter) / Density

Volume = 6,440 ft^3

Calculation of storage building area and length
(Enter Values in Blue Boxes - Calculated Answers appear in Orange Boxes)

W =	29	feet	Inside Width of Building
h_p =	7.0	feet	Height of manure/litter pile in center (7.0 feet)
h_w =	4.8333	feet	Height of wall (4 feet 10 inches)
Open =	1	No.	Number of Open ends
Post =	8	feet	Spacing between posts

Area [A] = $(h_w * W) + [(h_p - h_w) * 0.5 * W]$
Nominal Length [L] = (Volume / Area)
Total Length of Wall $[L_t] = L + L_o$

A =	172	ft^2	Cross sectional area of pile
L =	37	feet	Nominal Length
L_o =	4	feet	4.0 feet x # of open ends
L_t =	41	feet	Total Length of wall
L_{rnd} =	48	feet	Rounded Total Wall Length to nearest Post Spacing
Vol_{act} =	8256	ft^3	Actual Volume of Storage

Remarks: Use a 30' by 48' building.